YAMAHA

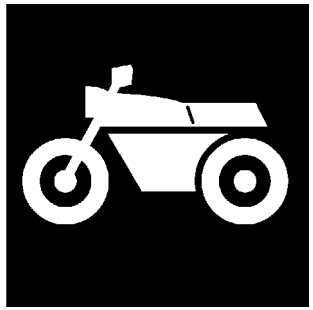

PARTS CATALOGUE

YZF-R6 (13SL) EUROPE,SOUTH AFRICA
YZF-R6 (13SN) EUROPE

1J13S-300E1

( )

YAMAHA
GENUINE
Parts & Accessories

YZF-R6
PARTS CATALOGUE
©2009 by Yamaha Motor Co., Ltd.
1st edition, September 2009
All rights reserved.
Any reprinting or unauthorized use
without the written permission of
Yamaha Motor Co., Ltd.
is expressly prohibited.
Printed in Japan.

FOREWORD

This Parts Catalogue is related to the parts for the model(s) on the cover page. When you are ordering replacement parts, please refer to this Parts Catalogue and quote both part numbers and part names correctly.

1. Modifications or additions which have been made after the issue of the Parts Catalogue will be announced in the Parts News.
   It is advisable that you make the necessary corrections to the Parts Catalogue according to the Parts News.

2. Abbreviations
   The following abbreviations are used in this Parts Catalogue.

   “UR” Use specified parts number.
   “UN” Use as many as needed.
   “AP” Alternate Parts
   “LM” Locally Made (Parts need to be ordered locally)
   “F#” Frame No. (Applicable machine No.)
   “O/S” Over Size

3. The number of components for assembly
   - Parts, which are to be supplied in an assembly, are listed with a dot (.) in front of the part name as shown below.
   - The numeral appearing to the right of each component part indicates the quantity of parts for each assembly unit.

PART NO.	DESCRIPTION	Q’TY	REMARKS
2F5–83310–60	FRONT FLASHER LIGHT ASSY	2	
115–83311–60	.BULB (6V–18W)	1	

4. Applicable colours of graphics are represented in the “REMARKS” as shown below.

PART NO.	DESCRIPTION	Q’TY	REMARKS
2N4–24110–00–X5	FUEL TANK COMP.	2	MXR
3J1–24240–10	.GRAPHIC, FUEL TANK	1	FOR MXR

5. Note that the illustrations for reference in finding parts numbers are not to be used for assembling. When assembling, please use the applicable service manual.

6. The asterisk (*) before a reference number indicates modified items after the first edition.

7. Applicable Serial No.

Engine Serial No.

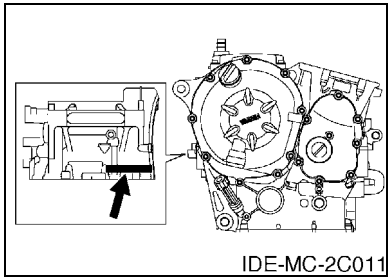

Frame Serial No.

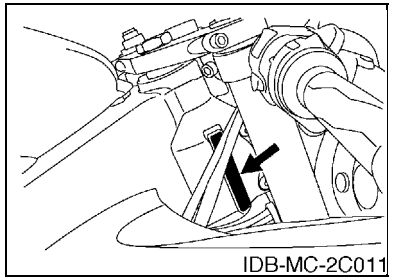

8. Applicable Colour Code (The (*) mark shows Model colour.)

Abbreviation	Colour Name	Colour Code
BWC1(*)	BLUISH WHITE COCKTAIL 1	0390
DPBMC(*)	DEEP PURPLISH BLUE METALLIC C	0564
LGB	LOW GLOSS BLACK	0098
MBL2	MAT BLACK 2	0582
NG	NEBURA GOLD	008L
SMX(*)	BLACK METALLIC X	0903

MODEL LABEL

(1) A label called “Model Label” is affixed in the location as indicated in (3) below.
When using this parts catalogue, please be sure to cross–reference the “model code – production code No.” in the catalogue with the “model code – production code No.” indicated on the Model Label affixed onto the product concerned.

(2) “Model Label” Indication

a b ○ xxxx – xxx ● x c	a: Model Type Code b: Production Code No. c: Colouring Type

○ 4TW1–010 ● A

(3) Model Label Affixing Location

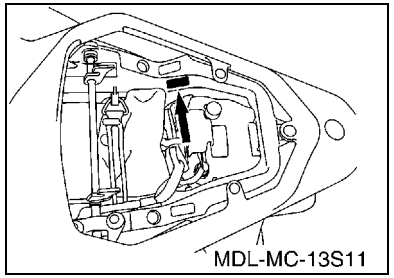

(4) Colouring Information

Model Code	Colouring Type Code	Colour Code	Colour Name	Abbreviation
13SL	A	0564	DEEP PURPLISH BLUE METALLIC C	DPBMC
	B	0390	BLUISH WHITE COCKTAIL 1	BWC1
	C	0903	BLACK METALLIC X	SMX
13SN	A	0564	DEEP PURPLISH BLUE METALLIC C	DPBMC
	B	0390	BLUISH WHITE COCKTAIL 1	BWC1
	C	0903	BLACK METALLIC X	SMX

(5) Model Code – Production Code Number of Model Listed in This Parts Catalogue

Model Code	Production Code No.	Country (destination)	Model Code	Production Code No.	Country (destination)
13SL	010	AUSTRIA			
		CZECHO			
		GERMANY			
		HUNGARY			
		ITALY			
		SPAIN			
		SWITZERLAND			
	050	AUSTRIA			
		CZECHO			
		GERMANY			
		HUNGARY			
		ITALY			
		SPAIN			
		SWITZERLAND			
	060	FINLAND			
		GREECE			
		IRELAND			
		POLAND			
		SLOVENIA			
		SOUTH AFRICA			
	070	UNITED KINGDOM			
13SN	010	BELGIUM			

CONTENTS

ENGINE

CYLINDER 1
CRANKSHAFT & PISTON 2
VALVE 3
CAMSHAFT & CHAIN 5
WATER PUMP 6
RADIATOR & HOSE 7
OIL PUMP 10
OIL CLEANER 11
INTAKE 12
INTAKE 2 14
AIR INDUCTION SYSTEM 16
EXHAUST 17
CRANKCASE 19
CRANKCASE COVER 1 21
STARTER 22
CLUTCH 23
TRANSMISSION 25
SHIFT CAM & FORK 27
SHIFT SHAFT 28

CHASSIS

FRAME 30
FENDER 32
SIDE COVER 35
REAR ARM 36
REAR SUSPENSION 38
STEERING 39
FRONT FORK 40
FUEL TANK 42
SEAT 45
FRONT WHEEL 46
FRONT BRAKE CALIPER 47
REAR WHEEL 48
REAR BRAKE CALIPER 50
STEERING HANDLE & CABLE 51
FRONT MASTER CYLINDER 52
STAND & FOOTREST 54
REAR MASTER CYLINDER 57
COWLING 1 59
COWLING 2 62
GENERATOR 67
STARTING MOTOR 68
FLASHER LIGHT 69
METER 70
HEADLIGHT 71
TAILLIGHT 72
HANDLE SWITCH & LEVER 73
ELECTRICAL 1 74
ELECTRICAL 2 76

INDEX

NUMERICAL INDEX 78

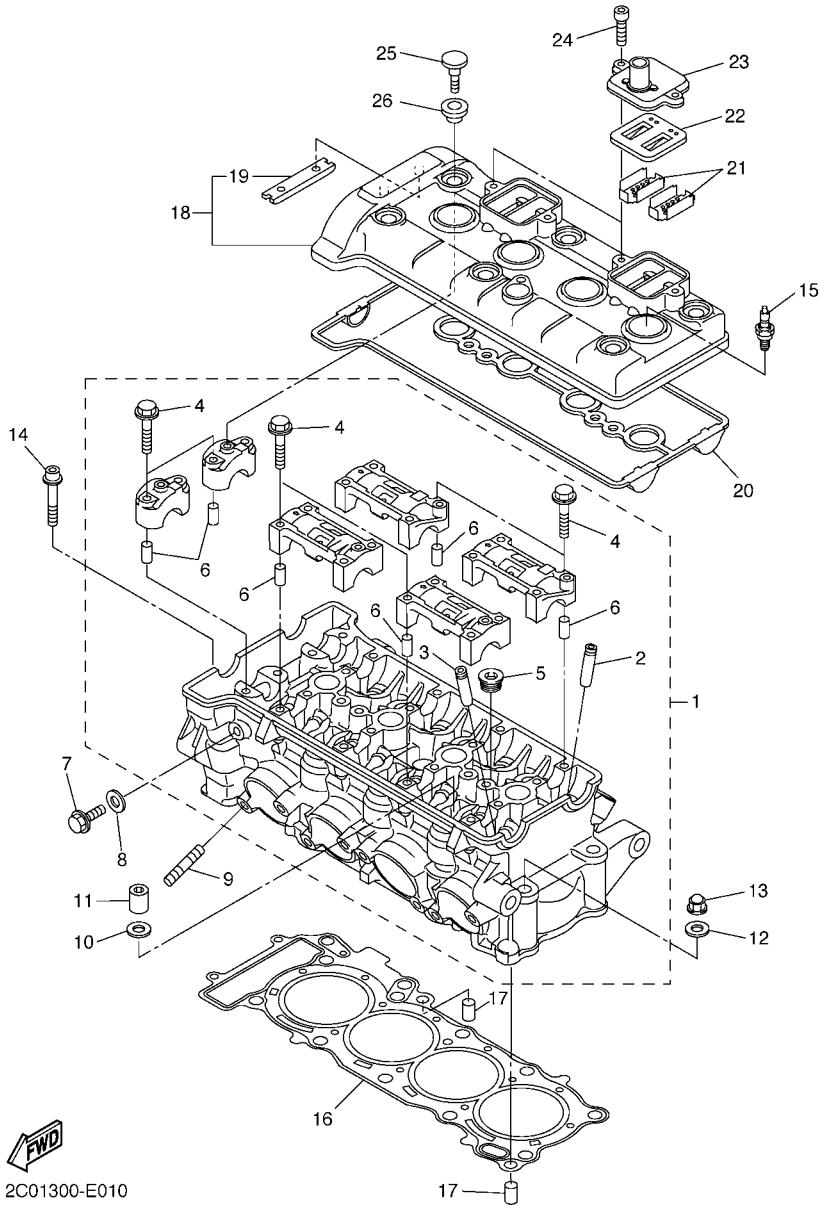

FIG. 1 CYLINDER

REF. NO.	PART NO.	DESCRIPTION	13SL	13SN				REMARKS
1	2C0–11101–01	CYLINDER HEAD ASSY	1	1				
2	2C0–11133–11	.GUIDE, VALVE 1	8	8				
3	2C0–11134–11	.GUIDE, VALVE 2	8	8				
4	90105–06027	.BOLT, FLANGE	20	20				
5	90340–18002	.PLUG, STRAIGHT SCREW	3	3				
6	91808–16023	.PIN, DOWEL	12	12				
7	95022–08012	BOLT, FLANGE	1	1				
8	90430–08119	GASKET	1	1				
9	95612–08625	BOLT, STUD	8	8				
10	90201–10013	WASHER, PLATE	8	8				
11	90179–10006	NUT	8	8				
12	90201–10013	WASHER, PLATE	2	2				
13	90176–10075	NUT, CROWN	2	2				
14	90110–06094	BOLT, HEXAGON SOCKET HEAD	2	2				
15	94701–00402	PLUG, SPARK (NGK CR10EK)	4	4				
16	2C0–11181–01	GASKET, CYLINDER HEAD 1	1	1				
17	99530–10114	PIN, DOWEL	2	2				
18	2C0–11191–00	COVER, CYLINDER HEAD 1	1	1				
19	5BE–12241–00	.GUIDE, STOPPER 2	1	1				
20	2C0–11193–00	GASKET, HEAD COVER 1	1	1				
21	5VY–1482K–00	PLATE	4	4				
22	5SL–14890–00	REED VALVE ASSY	2	2				
23	5VY–14899–00	CAP, CASE	2	2				
24	90110–06175	BOLT, HEXAGON SOCKET HEAD	4	4				
25	90109–066F0	BOLT	6	6				
26	5VY–1111G–00	RUBBER, MOUNT 1	6	6				

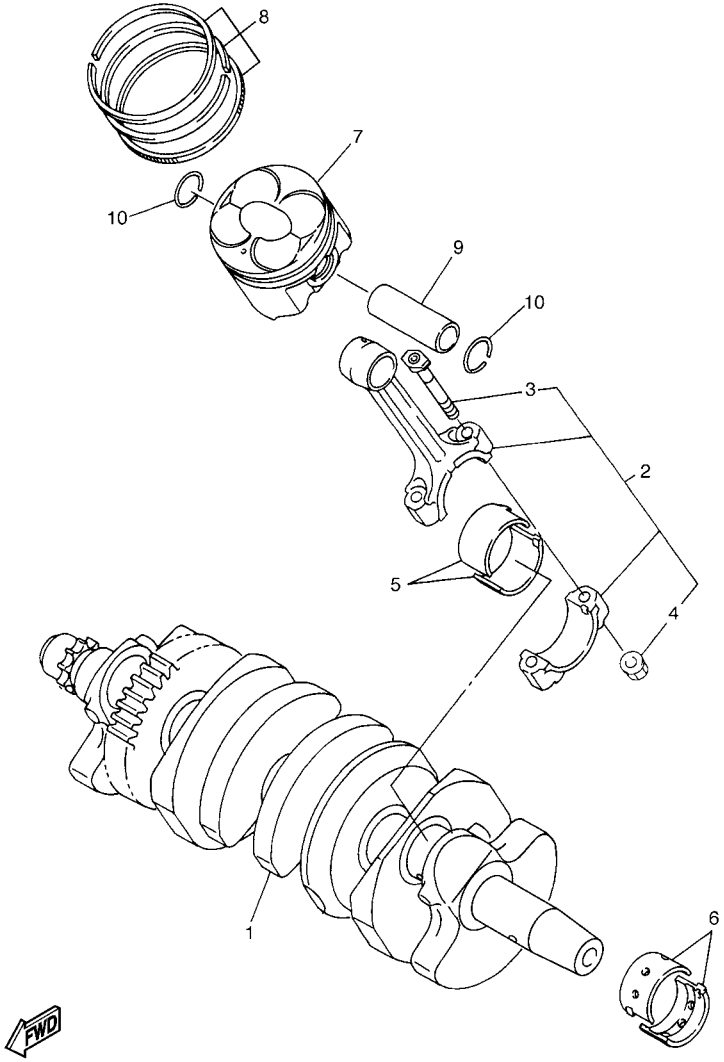

2C01300-E021

FIG. 2 CRANKSHAFT & PISTON

REF. NO.	PART NO.	DESCRIPTION	13SL	13SN				REMARKS
1	2C0–11411–00	CRANKSHAFT	1	1				
2	13S–11650–01	CONNECTING ROD ASSY	4	4				
3	2C0–11654–00	.BOLT, CONNECTING ROD	2	2				
4	90179–07001	.NUT	2	2				
5	13S–11656–00	PLANE BEARING, CONNECTING ROD	8	8				UR BLUE
	13S–11656–10	PLANE BEARING, CONNECTING ROD	8	8				UR BLACK
	13S–11656–20	PLANE BEARING, CONNECTING ROD	8	8				UR BROWN
	13S–11656–30	PLANE BEARING, CONNECTING ROD	8	8				UR GREEN
6	13S–11416–A0	PLANE BEARING, CRANKSHAFT 1	10	10				UR WHITE
	13S–11416–00	PLANE BEARING, CRANKSHAFT 1	10	10				UR BLUE
	13S–11416–10	PLANE BEARING, CRANKSHAFT 1	10	10				UR BLACK
	13S–11416–20	PLANE BEARING, CRANKSHAFT 1	10	10				UR BROWN
	13S–11416–30	PLANE BEARING, CRANKSHAFT 1	10	10				UR GREEN
7	13S–11631–00	PISTON (STD)	4	4				
8	2C0–11603–00	PISTON RING SET (STD)	4	4				
9	2C0–11633–00	PIN, PISTON	4	4				
10	93450–16159	CIRCLIP	8	8				

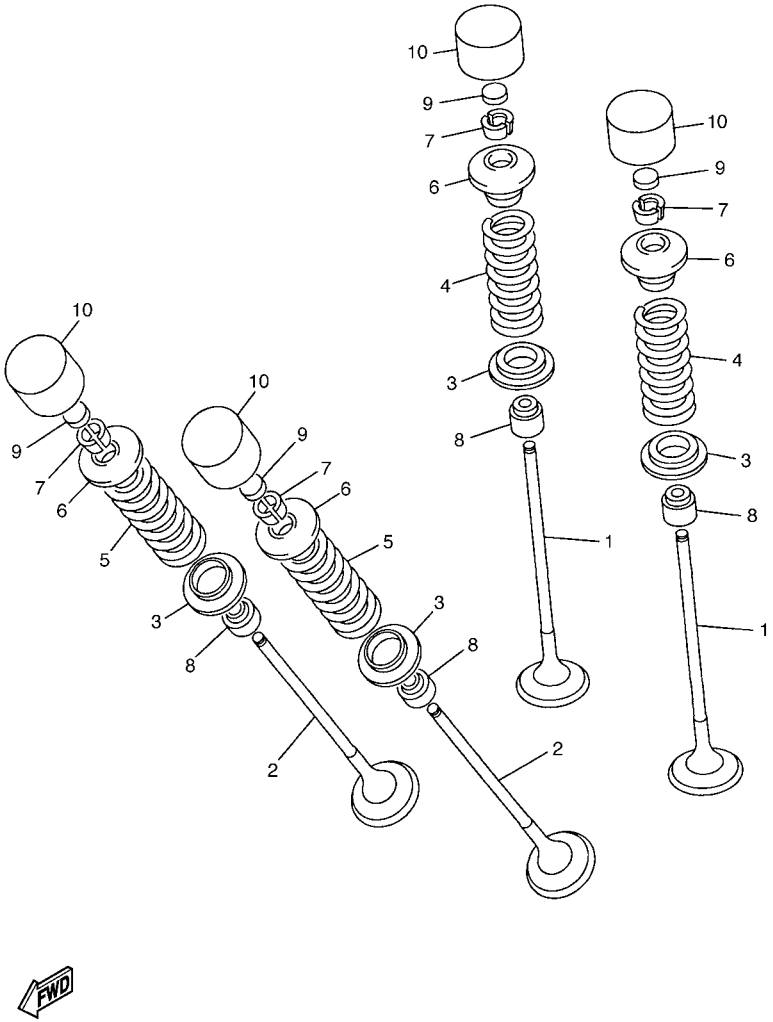

2C01300-E030

FIG. 3 VALVE

REF. NO.	PART NO.	DESCRIPTION	13SL	13SN				REMARKS
1	13S–12111–01	VALVE, INTAKE	8	8				
2	2C0–12121–00	VALVE, EXHAUST	8	8				
3	2C0–12116–00	SEAT, VALVE SPRING	16	16				
4	13S–12113–00	SPRING, VALVE INNER	8	8				
5	13S–12114–00	SPRING, VALVE OUTER	8	8				
6	13S–12117–00	RETAINER, VALVE SPRING	16	16				
7	1WG–12118–00	COTTER, VALVE	32	32				
8	4SV–12119–00	SEAL, VALVE STEM	16	16				
9	1HX–12168–F0	PAD, ADJUSTING 2 (1.50)	16	16				UR
	1HX–12168–H1	PAD, ADJUSTING 2 (1.55)	16	16				UR
	1HX–12168–K1	PAD, ADJUSTING 2 (1.60)	16	16				UR
	1HX–12168–M1	PAD, ADJUSTING 2 (1.65)	16	16				UR
	1HX–12168–R1	PAD, ADJUSTING 2 (1.70)	16	16				UR
	1HX–12168–U1	PAD, ADJUSTING 2 (1.75)	16	16				UR
	1HX–12168–W1	PAD, ADJUSTING 2 (1.80)	16	16				UR
	1HX–12168–Y1	PAD, ADJUSTING 2 (1.85)	16	16				UR
	1HX–12169–11	PAD, ADJUSTING 2 (1.90)	16	16				UR
	1HX–12169–31	PAD, ADJUSTING 2 (1.95)	16	16				UR
	1HX–12169–50	PAD, ADJUSTING 2 (2.00)	16	16				UR
	1HX–12169–70	PAD, ADJUSTING 2 (2.05)	16	16				UR
	1HX–12169–90	PAD, ADJUSTING 2 (2.10)	16	16				UR
	1HX–12169–E0	PAD, ADJUSTING 2 (2.15)	16	16				UR
	1HX–12169–G0	PAD, ADJUSTING 2 (2.20)	16	16				UR
	1HX–12169–J0	PAD, ADJUSTING 2 (2.25)	16	16				UR
	1HX–12169–L0	PAD, ADJUSTING 2 (2.30)	16	16				UR
	1HX–12169–N0	PAD, ADJUSTING 2 (2.35)	16	16				UR
	1HX–12169–T0	PAD, ADJUSTING 2 (2.40)	16	16				UR

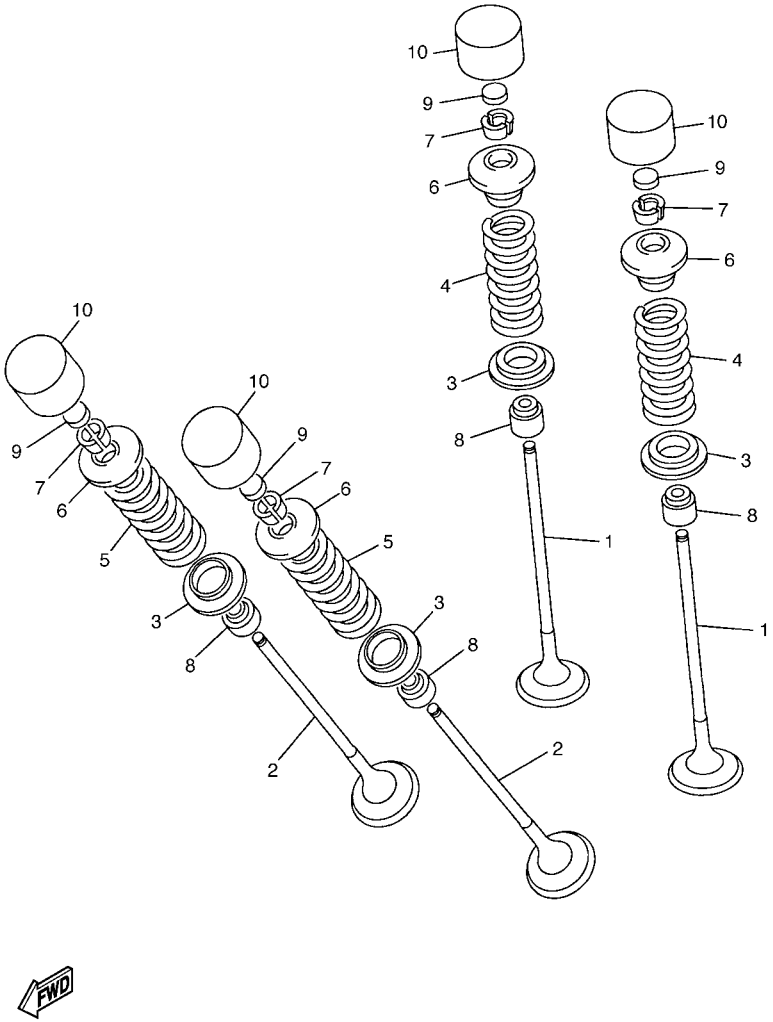

2C01300-E030

FIG. 3 VALVE

REF. NO.	PART NO.	DESCRIPTION	13SL	13SN				REMARKS
10	5EB–12153–20	LIFTER, VALVE	16	16				UR BLUE
	5EB–12153–30	LIFTER, VALVE	16	16				UR RED
	5EB–12153–09	LIFTER, VALVE (O/S)	16	16				AP GREEN

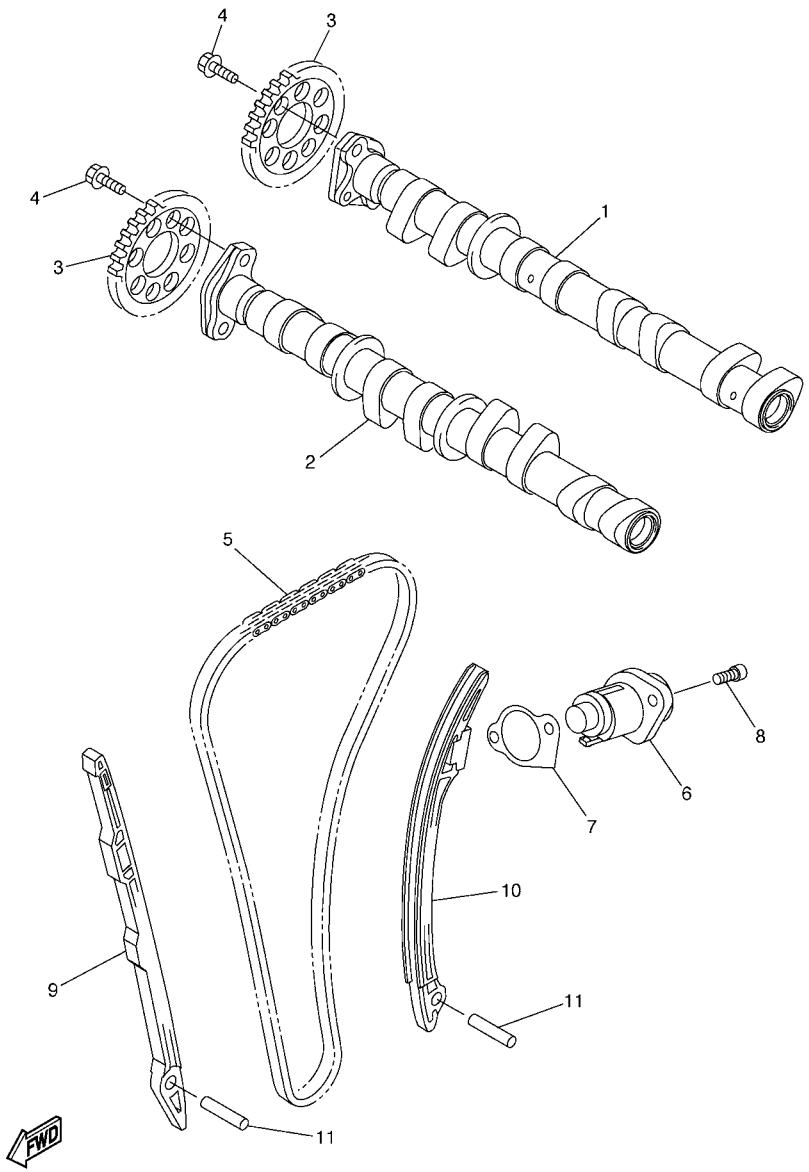

2C01300-E040

FIG. 4 CAMSHAFT & CHAIN

REF. NO.	PART NO.	DESCRIPTION	13SL	13SN				REMARKS
1	13S–12170–00	CAMSHAFT ASSY 1	1	1				
2	13S–12180–00	CAMSHAFT ASSY 2	1	1				
3	2C0–12176–00	SPROCKET, CAM CHAIN	2	2				
4	90105–07004	BOLT, FLANGE	4	4				
5	94591–64118	CHAIN	1	1				
6	13S–12210–00	TENSIONER ASSY, CAM CHAIN	1	1				
7	2C0–12213–00	GASKET, TENSIONER CASE	1	1				
8	90110–06106	BOLT, HEXAGON SOCKET HEAD	2	2				
9	2C0–12251–00	DAMPER, CHAIN 1	1	1				
10	13S–12252–00	DAMPER, CHAIN 2	1	1				
11	93607–44002	PIN, DOWEL	2	2				

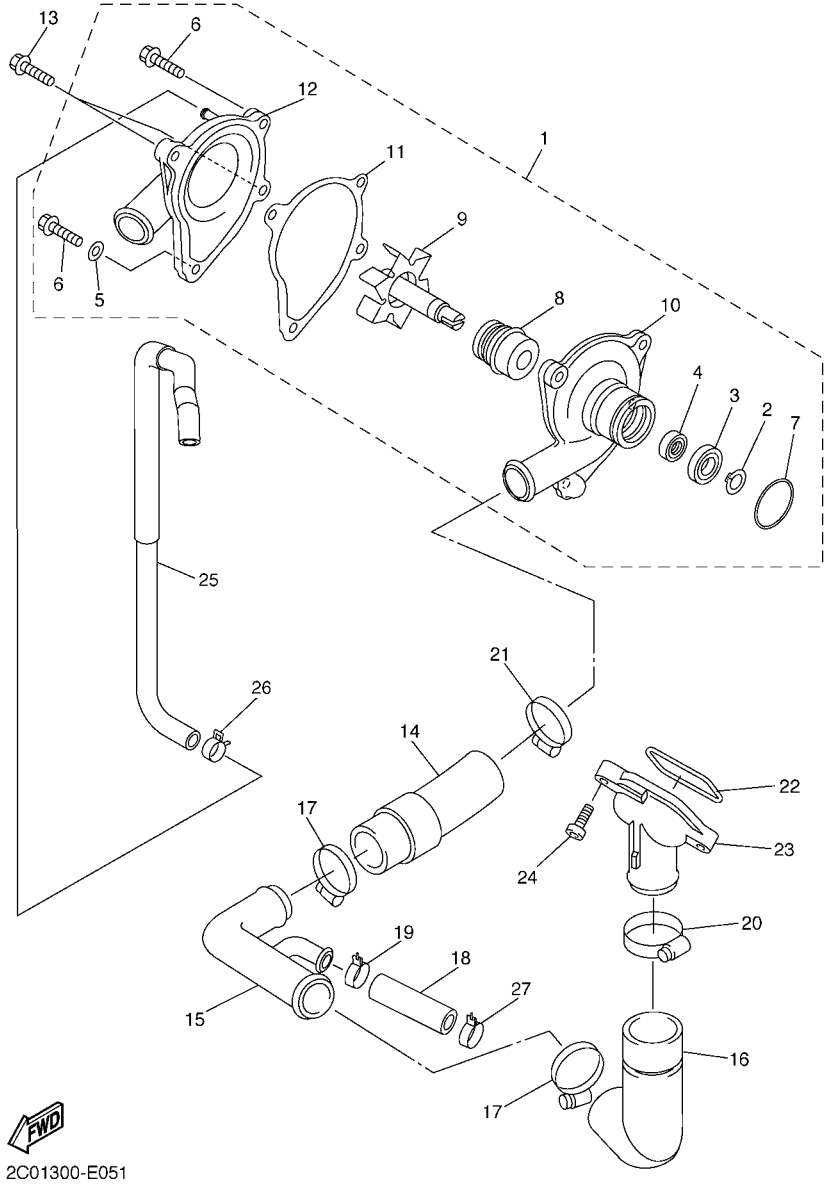

2C01300-E051

FIG. 5 WATER PUMP

REF. NO.	PART NO.	DESCRIPTION	13SL	13SN				REMARKS
1	2C0–12420–00	WATER PUMP ASSY	1	1				
2	99009–10400	.CIRCLIP	1	1				
3	93306–00006	.BEARING	1	1				
4	93101–10090	.OIL SEAL	1	1				
5	90430–06014	.GASKET	1	1				
6	95024–06025	.BOLT, FLG.(SMALL HEAD)	2	2				
7	93210–33133	.O-RING	1	1				
8	2C0–12438–00	.SEAL, MECHANICAL	1	1				
9	2C0–12450–00	.IMPELLER SHAFT ASSY	1	1				
10	2C0–12421–00	.HOUSING, WATER PUMP	1	1				
11	2C0–12428–01	.GASKET, HOUSING COVER 2	1	1				
12	2C0–W1242–00	.COVER, HOUSING	1	1				
13	90110–06140	BOLT, HEXAGON SOCKET HEAD	2	2				
14	2C0–12576–00	HOSE 1	1	1				
15	2C0–12581–00	JOINT, HOSE 1	1	1				
16	2C0–12577–00	HOSE 2	1	1				
17	90450–35001	HOSE CLAMP ASSY	2	2				
18	2C0–12588–00	HOSE 5	1	1				
19	90467–200A0	CLIP	1	1				
20	90450–38003	HOSE CLAMP ASSY	1	1				
21	90450–32001	HOSE CLAMP ASSY	1	1				
22	93210–46001	O-RING	1	1				
23	5EB–12469–00	JOINT 1	1	1				
24	90105–06082	BOLT, FLANGE	2	2				
25	2C0–1243A–00	HOSE 1	1	1				
26	90467–11090	CLIP	2	2				
27	90467–200A0	CLIP	1	1				

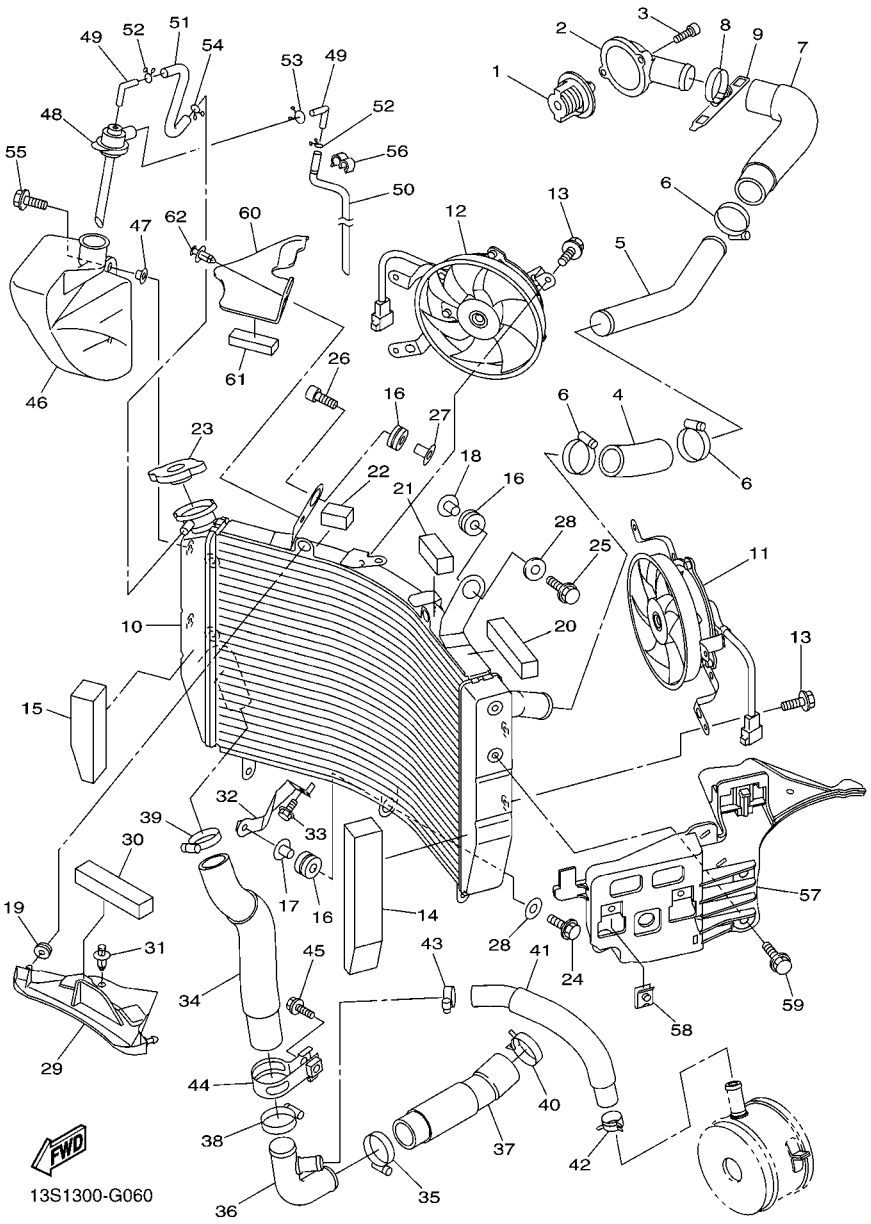

FIG. 6 RADIATOR & HOSE

REF. NO.	PART NO.	DESCRIPTION	13SL	13SN				REMARKS
1	5SL–12410–00	THERMOSTAT ASSY	1	1				
2	2C0–12413–00	COVER, THERMOSTAT	1	1				
3	91312–06020	BOLT	2	2				
4	2C0–12578–00	HOSE 3	1	1				
5	2C0–12481–00	PIPE 1	1	1				
6	90450–35001	HOSE CLAMP ASSY	3	3				
7	2C0–12552–00	HOSE 8	1	1				
8	90450–35001	HOSE CLAMP ASSY	1	1				
9	5GV–1246E–00	COVER 2	1	1				
10	13S–12461–00	RADIATOR COMP	1	1				
11	2C0–12405–00	BLOWER ASSY	1	1				
12	2C0–12405–10	BLOWER ASSY	1	1				
13	5GJ–12675–00	BOLT, BLOWER HOLDING	6	6				
14	2C0–12659–00	DAMPER, AIR SHROUD 2	1	1				
15	2C0–12668–00	DAMPER, AIR SHROUD 3	1	1				
16	90480–15363	GROMMET	3	3				
17	90387–07391	COLLAR	1	1				
18	90387–0614M	COLLAR	1	1				
19	90480–11005	GROMMET	2	2				
20	13S–12659–00	DAMPER, AIR SHROUD 2	1	1				
21	13S–12678–00	DAMPER, AIR SHROUD 5	1	1				
22	13S–12688–00	DAMPER, SHROUD 7	1	1				
23	5SL–12462–00	CAP, RADIATOR	1	1				
24	90105–06040	BOLT, FLANGE	1	1				
25	95807–06035	BOLT, FLANGE	1	1				
26	91317–06035	BOLT	1	1				
27	90387–0614M	COLLAR	1	1				

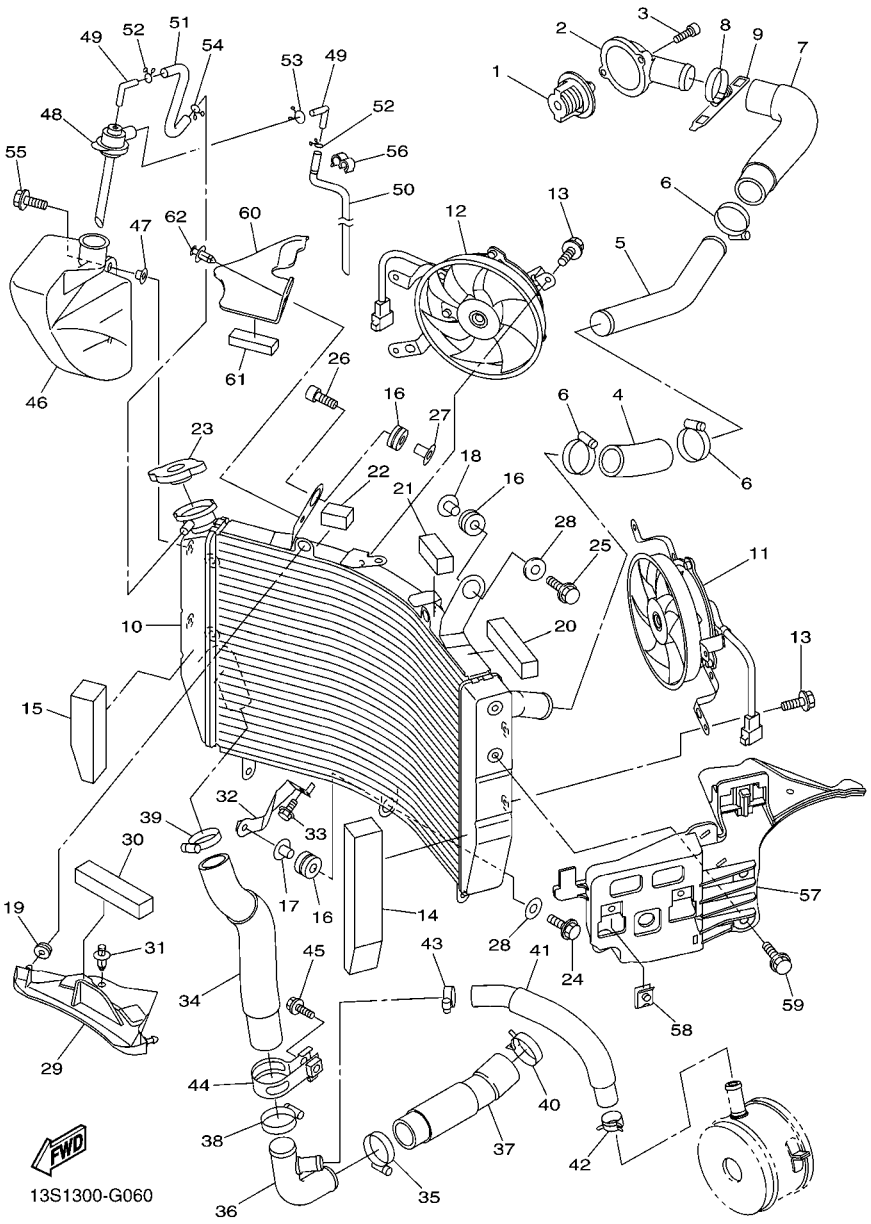

FIG. 6 RADIATOR & HOSE

REF. NO.	PART NO.	DESCRIPTION	13SL	13SN				REMARKS
28	90201–06071	WASHER, PLATE	2	2				
29	2C0–12535–00	PLATE	1	1				
30	13S–12669–00	DAMPER, AIR SHROUD 4	1	1				
31	90269–07007	RIVET	1	1				
32	2C0–1244E–00	BRACKET 1	1	1				
33	95827–06012	BOLT, FLANGE	1	1				
34	2C0–12579–00	HOSE 4	1	1				
35	90450–35001	HOSE CLAMP ASSY	1	1				
36	2C0–12582–00	JOINT, HOSE 2	1	1				
37	2C0–12551–00	HOSE 7	1	1				
38	90450–35001	HOSE CLAMP ASSY	1	1				
39	90450–35001	HOSE CLAMP ASSY	1	1				
40	90467–310A0	CLIP	1	1				
41	2C0–12589–00	HOSE 6	1	1				
42	90467–200A0	CLIP	1	1				
43	90450–22017	HOSE CLAMP ASSY	1	1				
44	2C0–12491–00	CLAMP 1	1	1				
45	95027–10020	BOLT, FLANGE	1	1				
46	2C0–21871–00	TANK, RECOVERY	1	1				
47	90387–06681	COLLAR	2	2				
48	2C0–21875–00	CAP	1	1				
49	26H–21828–00	ELBOW	2	2				
50	2C0–21816–00	PIPE 1	1	1				
51	2C0–1243F–00	HOSE,3	1	1				
52	90467–08003	CLIP	2	2				
53	90467–10M04	CLIP	1	1				
54	90467–08003	CLIP	1	1				

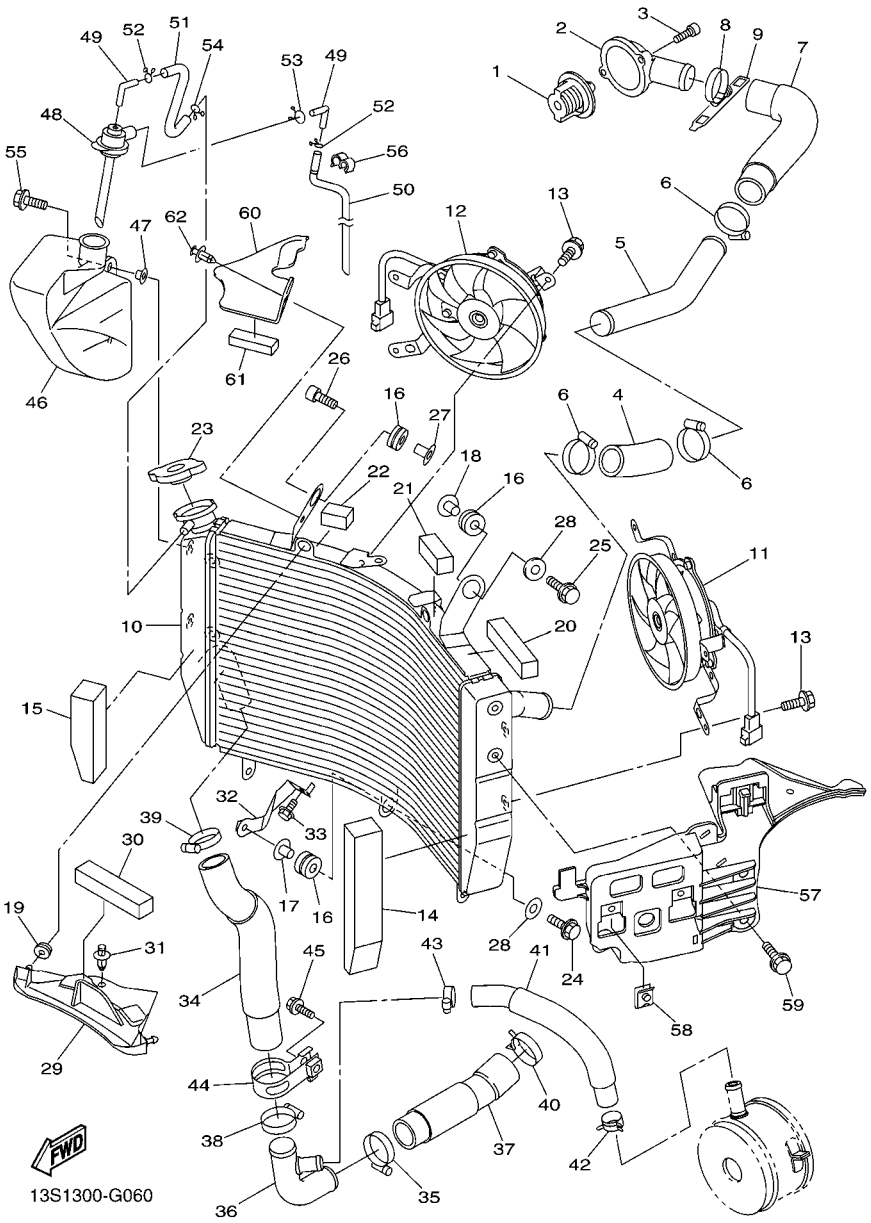

FIG. 6 RADIATOR & HOSE

REF. NO.	PART NO.	DESCRIPTION	13SL	13SN				REMARKS
55	95802–06014	BOLT, FLANGE	2	2				
56	90464–10M38	CLAMP	1	1				
57	13S–2836H–00	BRACKET 5	1	1				
58	90183–06069	NUT, SPRING	2	2				
59	95802–06014	BOLT, FLANGE	2	2				
60	2C0–1246H–00	COVER 5	1	1				
61	13S–12668–00	DAMPER, AIR SHROUD 3	1	1				
62	90269–06083	RIVET	1	1				

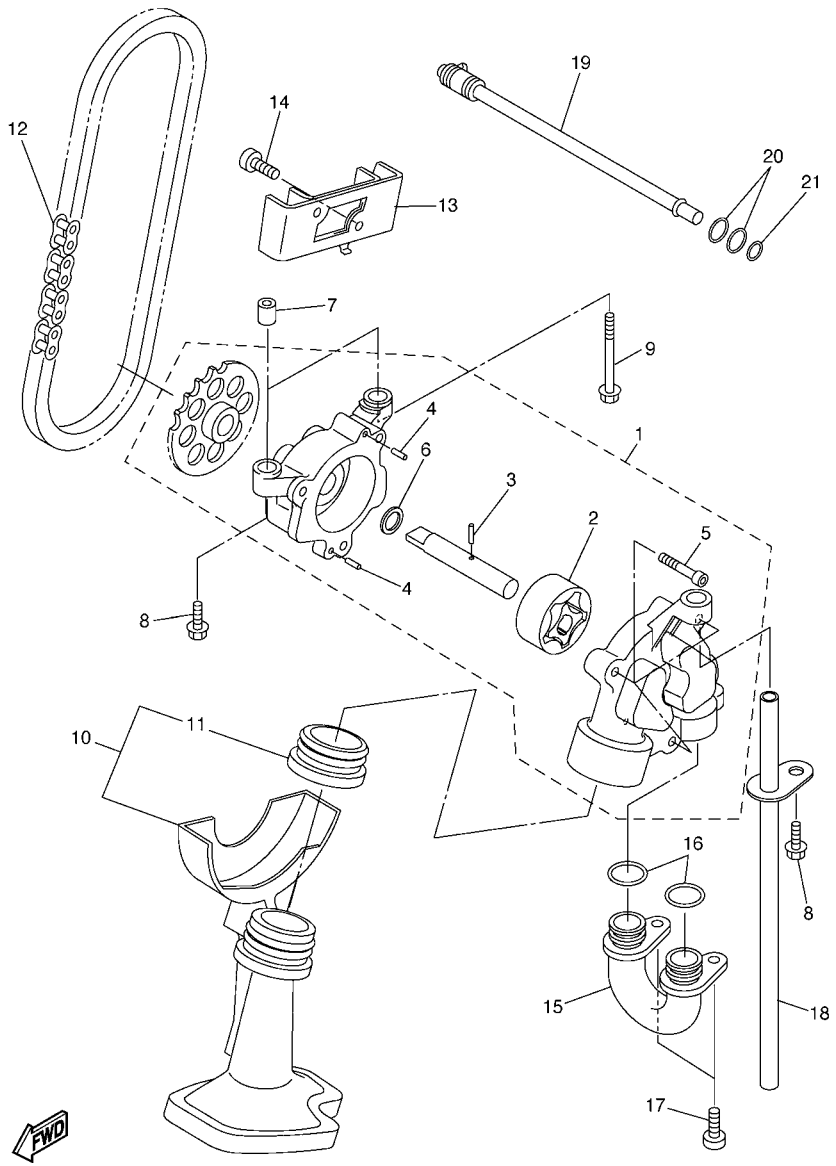

2C01300-E070

FIG. 7 OIL PUMP

REF. NO.	PART NO.	DESCRIPTION	13SL	13SN				REMARKS
1	2C0–13300–00	OIL PUMP ASSY	1	1				
2	4SV–13310–00	.ROTOR ASSY 1	1	1				
3	93603–17070	.PIN, DOWEL	1	1				
4	93603–09106	.PIN, DOWEL	2	2				
5	91312–06025	.BOLT	3	3				
6	90201–113K2	.WASHER, PLATE	1	1				
7	91808–17032	PIN, DOWEL	2	2				
8	95812–06030	BOLT, FLANGE	2	2				
9	95812–06080	BOLT, FLANGE	1	1				
10	2C0–13410–00	STRAINER HOUSING ASSY	1	1				
11	2C0–13415–00	.SEAL, OIL STRAINER	1	1				
12	94580–25074	CHAIN	1	1				
13	2C0–13898–00	HOLDER	1	1				
14	90110–06161	BOLT, HEXAGON SOCKET HEAD	2	2				
15	2C0–13416–00	PIPE, OIL 1	1	1				
16	93210–14003	O-RING	2	2				
17	90110–06161	BOLT, HEXAGON SOCKET HEAD	2	2				
18	5EB–13161–00	PIPE, DELIVERY 1	1	1				
19	2C0–1316E–00	PIPE, DELIVERY 5	1	1				
20	93210–09165	O-RING	2	2				
21	93210–06667	O-RING	1	1				

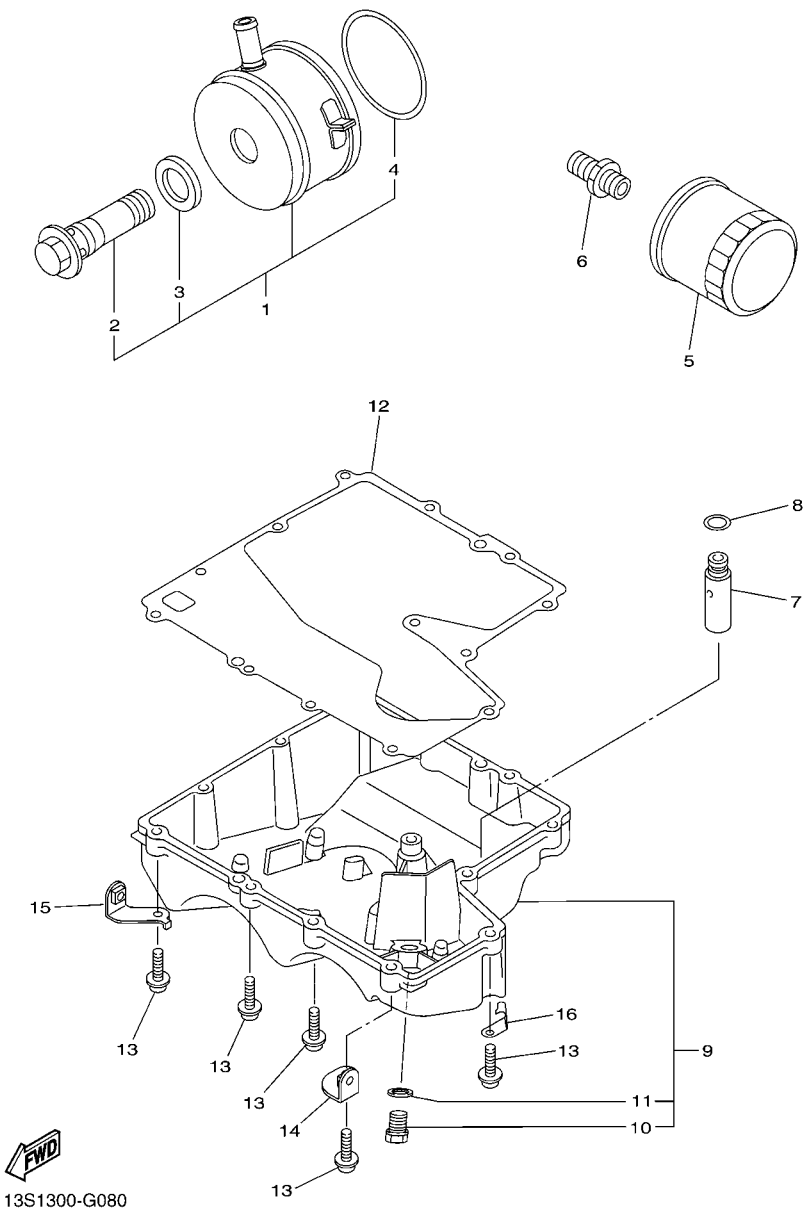

FIG. 8 OIL CLEANER

REF. NO.	PART NO.	DESCRIPTION	13SL	13SN				REMARKS
1	13S–13470–00	OIL COOLER ASSY	1	1				
2	5EB–12822–00	.BOLT, UNION	1	1				
3	5EB–13475–00	.GASKET	1	1				
4	5JW–13473–00	.O-RING	1	1				
5	5GH–13440–20	ELEMENT ASSY, OIL CLEANER	1	1				
6	90401–20145	BOLT, UNION	1	1				
7	2C0–13490–00	RELIEF VALVE ASSY	1	1				
8	93210–15566	O-RING	1	1				
9	2C0–13400–00	STRAINER COVER ASSY	1	1				
10	90340–14132	.PLUG, STRAIGHT SCREW	1	1				
11	214–11198–01	.GASKET	1	1				
12	2C0–13414–01	GASKET, STRAINER COVER	1	1				
13	90110–06326	BOLT, HEXAGON SOCKET HEAD	13	13				
14	13S–2836A–00	BRACKET 1	1	1				
15	13S–2836E–00	BRACKET 2	1	1				
16	90465–10040	CLAMP	1	1				

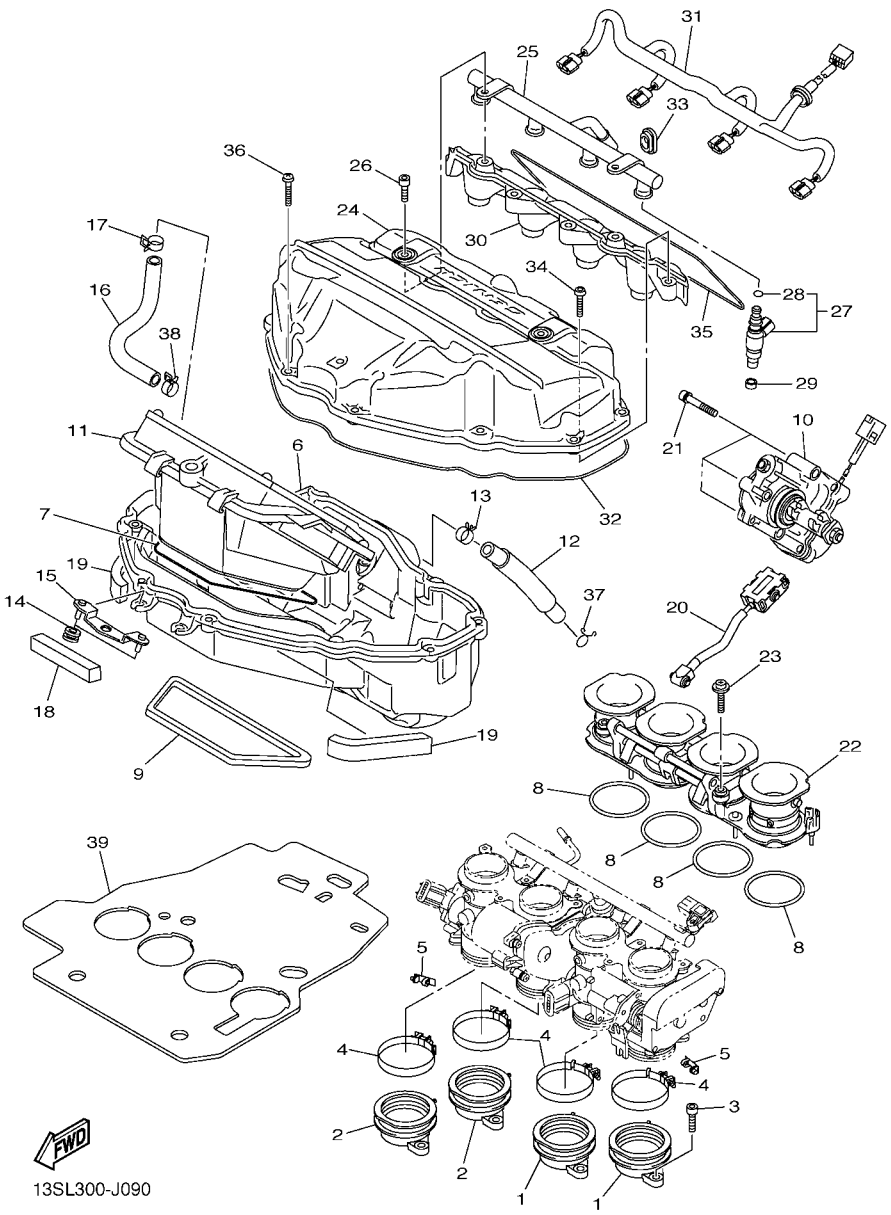

FIG. 9 INTAKE

REF. NO.	PART NO.	DESCRIPTION	13SL	13SN				REMARKS
1	2C0–13586–00	JOINT, CARBURETOR 1	2	2				
2	2C0–13596–00	JOINT, CARBURETOR 2	2	2				
3	91312–06016	BOLT	8	8				
4	90450–56007	HOSE CLAMP ASSY	4	4				
5	2C0–13881–00	COVER 1	2	2				
6	13S–14411–00	CASE, AIR CLEANER 1	1	1				
7	13S–14462–00	SEAL	1	1				
8	13S–14457–00	SEAL	4	4				
9	2C0–14467–00	SEAL	1	1				
10	13S–85870–00	GEARED MOTOR COMP. 2	1	1				
11	13S–14450–20	ELEMENT ASSY, AIR CLEANER	1	1				
12	13S–15373–00	PIPE, BREATHER	1	1				
13	90467–15001	CLIP	1	1				
14	90480–08264	GROMMET	2	2				
15	13S–14498–00	STAY 1	1	1				
16	13S–14882–00	HOSE, BEND 2	1	1				
17	90467–180A3	CLIP	1	1				
18	2C0–14409–00	DAMPER	1	1				
19	2C0–14425–00	DAMPER 1	2	2				
20	13S–14490–00	SHAFT ASSY	1	1				
21	90110–05047	BOLT, HEXAGON SOCKET HEAD	3	3				
22	13S–1440B–00	JOINT ASSY	1	1				
23	90159–05035	SCREW, WITH WASHER	2	2				
24	13S–14421–10	CASE, AIR CLEANER 2	1	1				
25	13S–13938–00	PIPE	1	1				
26	90111–06064	BOLT,HEX. SOCKET BUTTON	2	2				
27	13S–13761–00	INJECTOR	4	4				

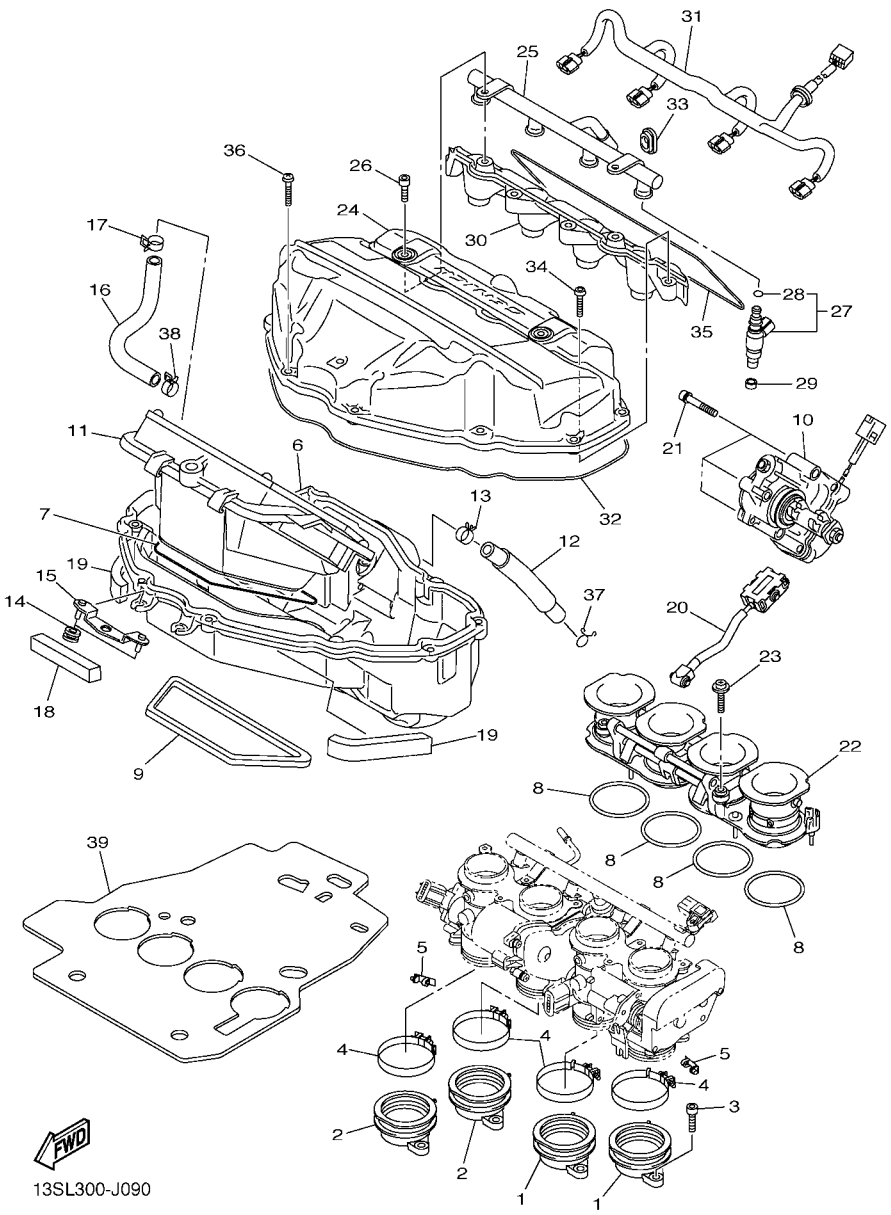

FIG. 9 INTAKE

REF. NO.	PART NO.	DESCRIPTION	13SL	13SN				REMARKS
28	5PS–14147–00	.O-RING	1	1				
29	90430–09002	GASKET	4	4				
30	13S–13767–00	CAP, INJECTOR	1	1				
31	13S–82318–00	WIRE, SUB-LEAD	1	1				
32	2C0–14452–00	SEAL	1	1				
33	13S–14445–00	GROMMET	1	1				
34	92012–06020	BOLT, BUTTON HEAD	4	4				
35	13S–1446R–00	SEAL	1	1				
36	98902–05020	SCREW, BIND	11	11				
37	90467–14015	CLIP	1	1				
38	90467–180A3	CLIP	1	1				
39	2C0–12682–00	PROTECTOR, HEAT	1	1				

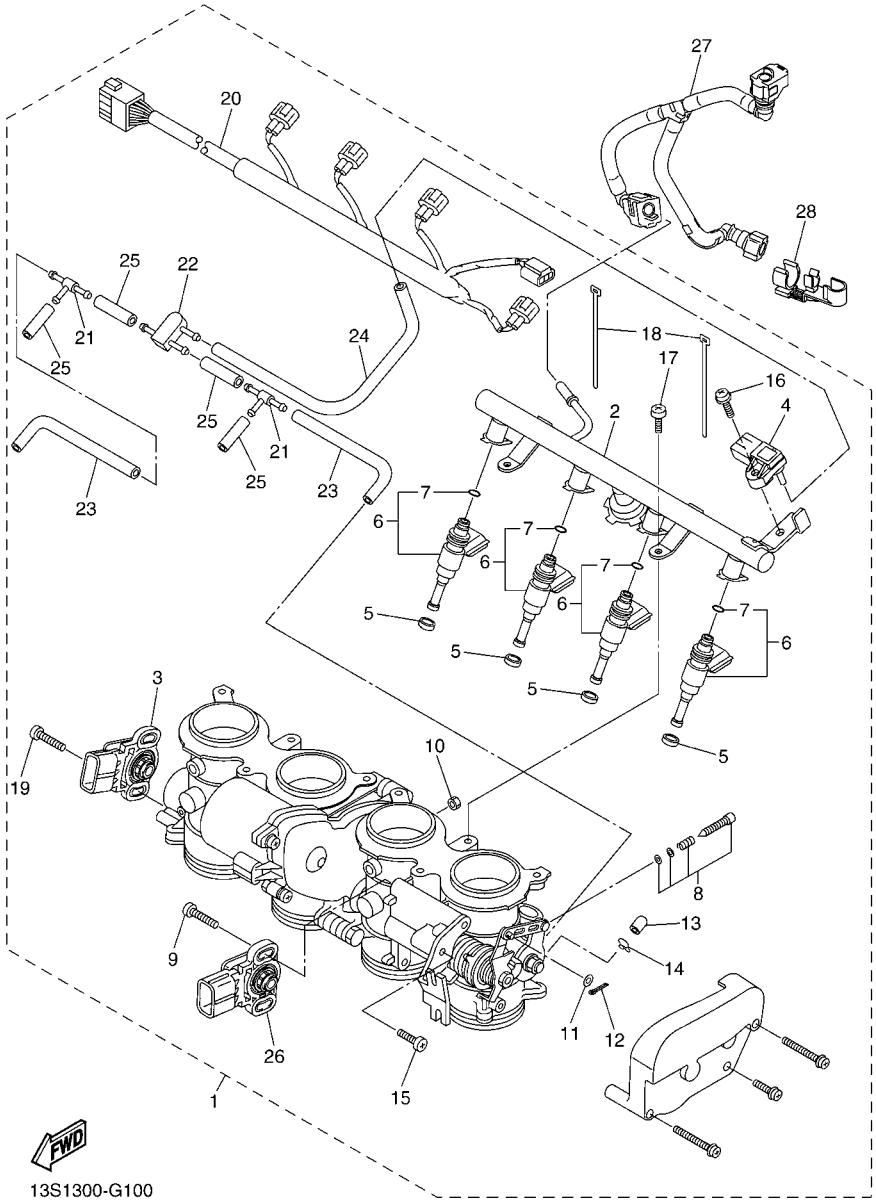

FIG. 10 INTAKE 2

REF. NO.	PART NO.	DESCRIPTION	13SL	13SN				REMARKS
1	13S–13750–00	THROTTLE BODY ASSY	1	1				
2	13S–13930–00	.PIPE INLET ASSEMBLY	1	1				
3	13S–85885–00	.THROTTLE SENSOR ASSY	1	1				
4	2C0–82380–00	.SENSOR, PRESSURE	1	1				
5	8FP–13556–00	.GASKET, MANIFOLD	4	4				
6	2C0–13761–00	.INJECTOR	4	4				
7	5PS–14147–00	..O-RING	1	1				
8	2C0–14105–00	.PILOT SCREW SET	4	4				
9	5FL–14216–00	.SCREW	2	2				
10	95307–04700	.NUT	1	1				
11	22U–14952–00	.WASHER	1	1				
12	91492–12010	.PIN, COTTER	1	1				
13	895–14169–00	.CAP	4	4				
14	8A7–14139–00	.CLIP, PIPE	4	4				
15	98507–05012	.SCREW, PAN HEAD	2	2				
16	2C0–14216–00	.SCREW	1	1				
17	98507–06012	.SCREW, PAN HEAD	2	2				
18	4KM–14137–00	.CLIP	2	2				
19	8CC–14216–10	.SCREW	2	2				
20	13S–82386–00	.EXTENSION, WIRE HARNESS	1	1				
21	68V–24376–00	.PIPE, JOINT 1	2	2				
22	3XV–14251–00	.NIPPLE	1	1				
23	68V–13533–00	.HOSE, VACUUM SENSING 4	2	2				
24	2C0–13532–00	.HOSE, VACUUM SENSING 3	1	1				
25	5FL–14348–10	.PIPE 1	4	4				
26	13S–85884–00	.ACCELERATOR SENSOR ASSY	1	1				
27	13S–13971–01	PIPE, FUEL 1	1	1				

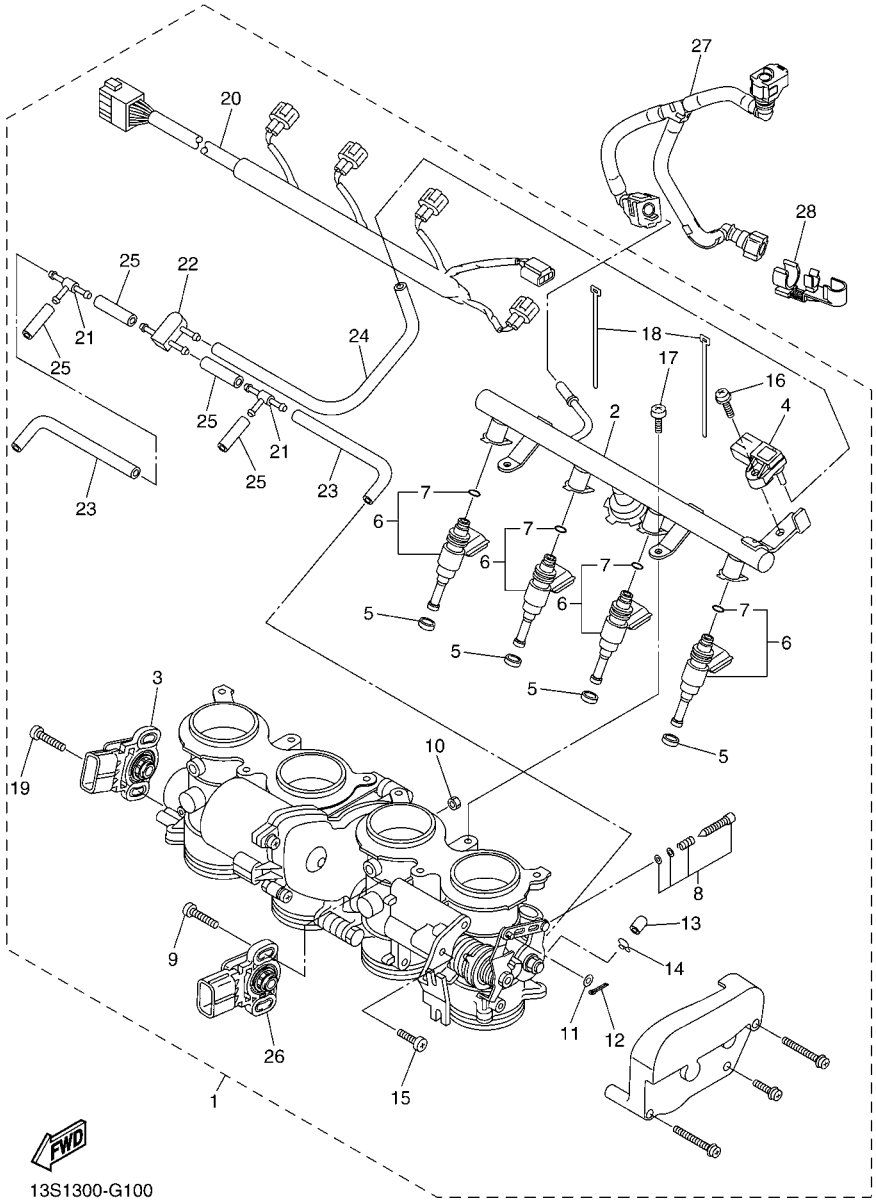

FIG. 10 INTAKE 2

REF. NO.	PART NO.	DESCRIPTION	13SL	13SN				REMARKS
28	90464–16005	CLAMP	1	1				

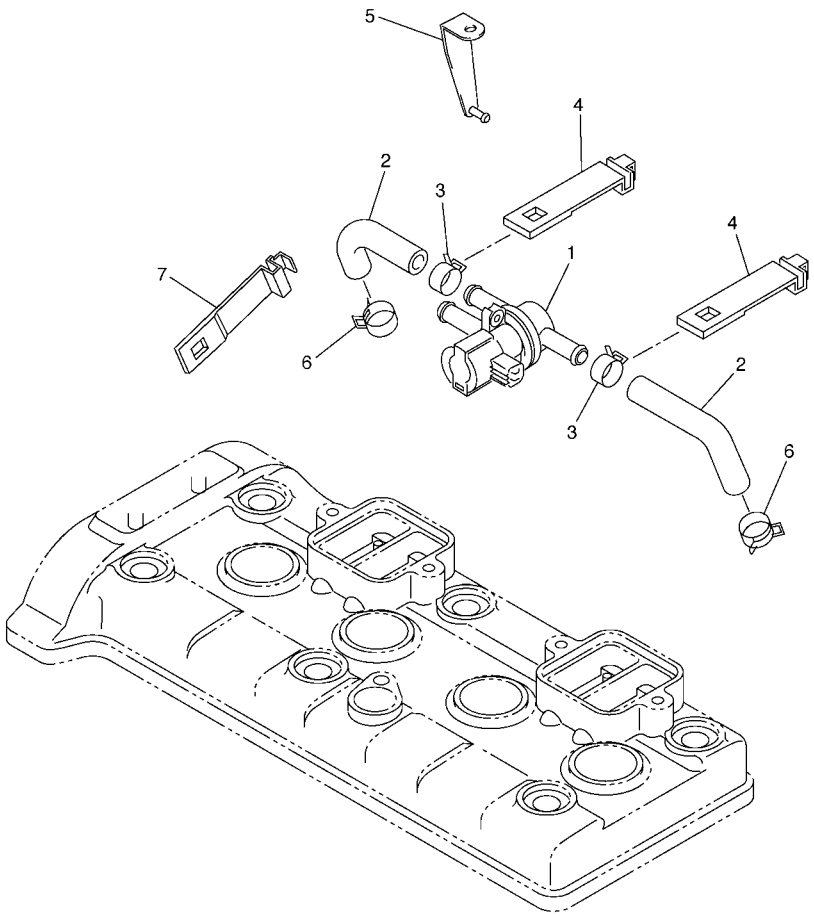

2C01300-E110

FIG. 11 AIR INDUCTION SYSTEM

REF. NO.	PART NO.	DESCRIPTION	13SL	13SN				REMARKS
1	2C0–14840–00	AIR CUT VALVE ASSY	1	1				
2	2C0–14881–00	HOSE, BEND 1	2	2				
3	90467–18172	CLIP	2	2				
4	5JW–14723–00	COVER 1	2	2				
5	2C0–21249–00	BRACKET	1	1				
6	90467–180A0	CLIP	2	2				
7	5JW–14723–00	COVER 1	1	1				

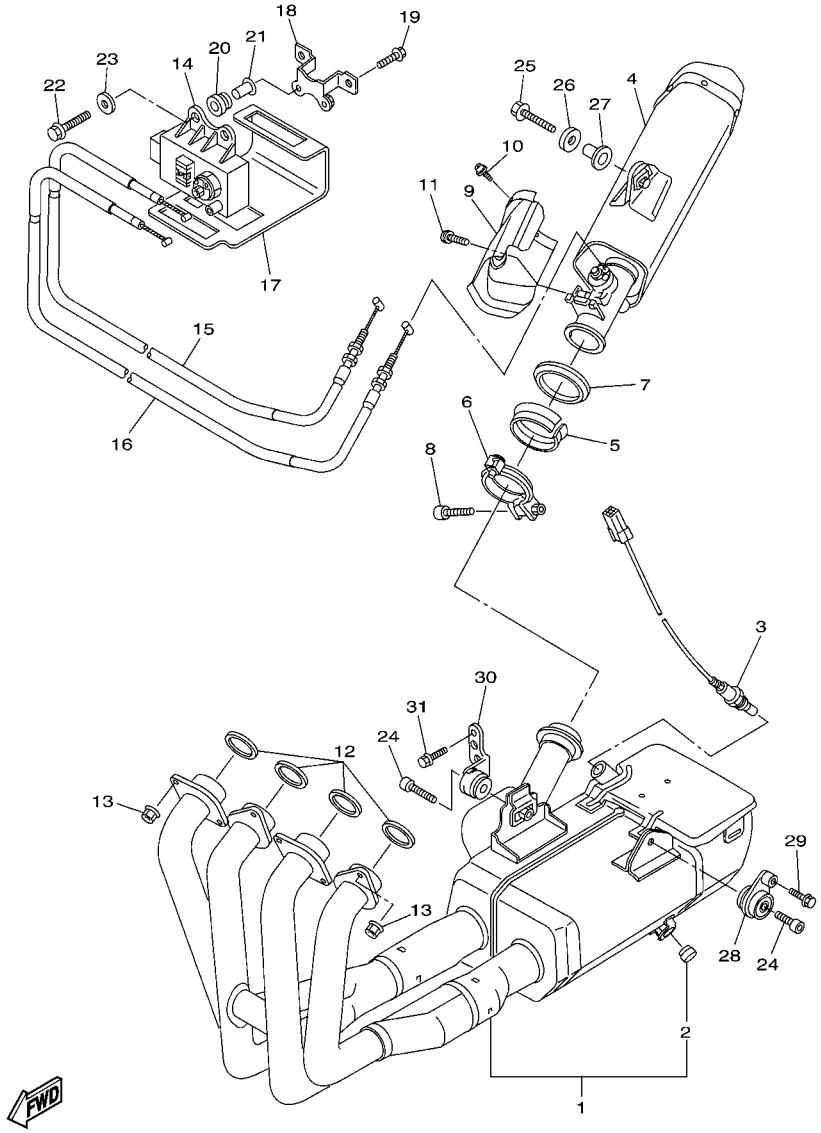

13S1300-G120

FIG. 12 EXHAUST

REF. NO.	PART NO.	DESCRIPTION	13SL	13SN				REMARKS
1	13S–14610–20	EXHAUST PIPE ASSY 1	1	1				
2	4FM–24181–00	.DAMPER, LOCATING 1	2	2				
3	13S–8592A–00	SENSOR, OXYGEN	1	1				
4	13S–14753–20	SILENCER, EXHAUST	1	1				
5	2C0–14618–00	RING, STOPPER	1	1				
6	2C0–14725–00	BAND, MUFFLER	1	1				
7	2C0–14623–00	GASKET, EXHAUST PIPE	1	1				
8	91314–06030	BOLT, HEXAGON SOCKET HEAD	1	1				
9	13S–14718–00	PROTECTOR, MUFFLER 1	1	1				
10	90111–06099	BOLT,HEX. SOCKET BUTTON	2	2				
11	90111–06071	BOLT,HEX. SOCKET BUTTON	1	1				
12	4FM–14613–00	GASKET, EXHAUST PIPE	4	4				
13	90179–08410	NUT	8	8				
14	2C0–85820–00	SERVO MOTOR ASSY	1	1				
15	13S–1133E–01	CABLE, PULLEY 1	1	1				
16	13S–1133F–01	CABLE, PULLEY 2	1	1				
17	2C0–2177F–00	COVER	1	1				
18	2C0–2116J–00	BRACKET 7	1	1				
19	95027–06025	BOLT, FLANGE	2	2				
20	90480–14005	GROMMET	2	2				
21	90387–063E6	COLLAR	2	2				
22	95827–06014	BOLT, FLANGE	2	2				
23	90201–06M31	WASHER, PLATE	2	2				
24	91314–08035	BOLT, HEXAGON SOCKET HEAD	2	2				
25	90105–08063	BOLT, FLANGE	1	1				
26	90201–087G2	WASHER, PLATE	1	1				
27	90387–08021	COLLAR	1	1				

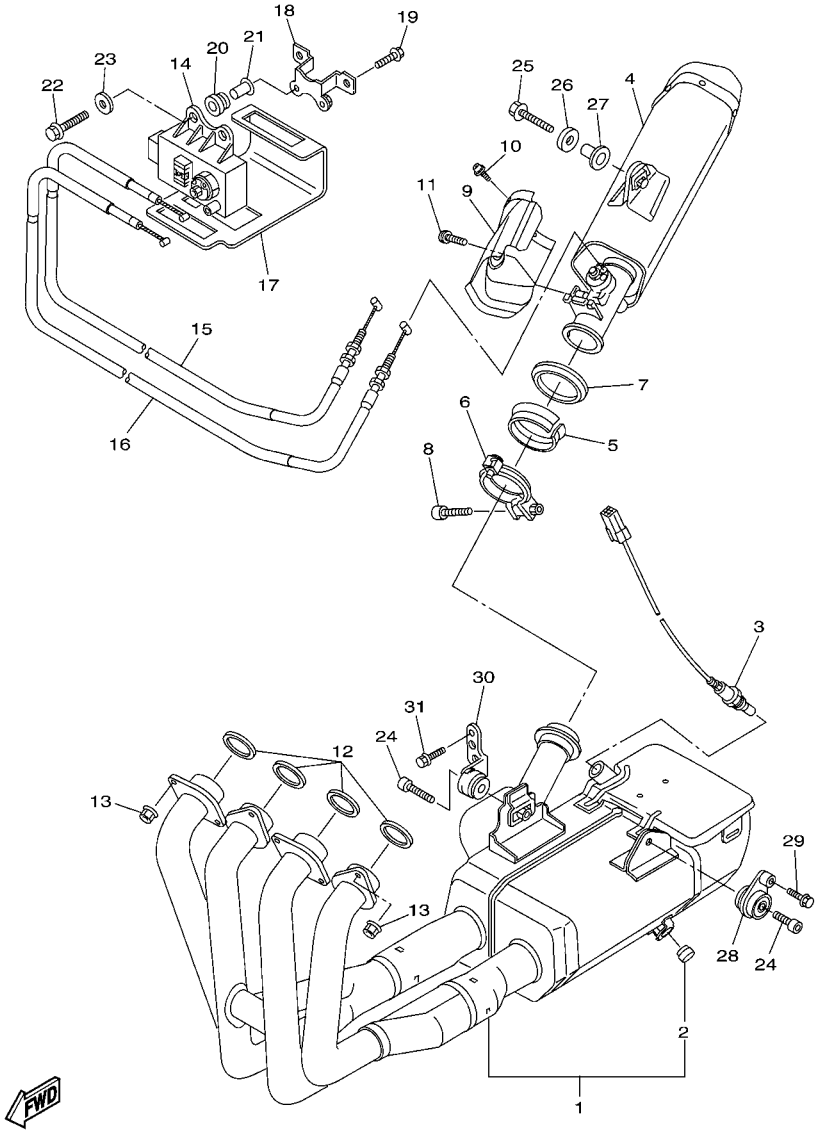

13S1300-G120

FIG. 12 EXHAUST

REF. NO.	PART NO.	DESCRIPTION	13SL	13SN				REMARKS
28	13S–21446–00	STAY, MUFFLER 2	1	1				
29	90105–08054	BOLT, FLANGE	1	1				
30	13S–21445–00	STAY, MUFFLER 1	1	1				
31	90105–08171	BOLT, FLANGE	1	1				

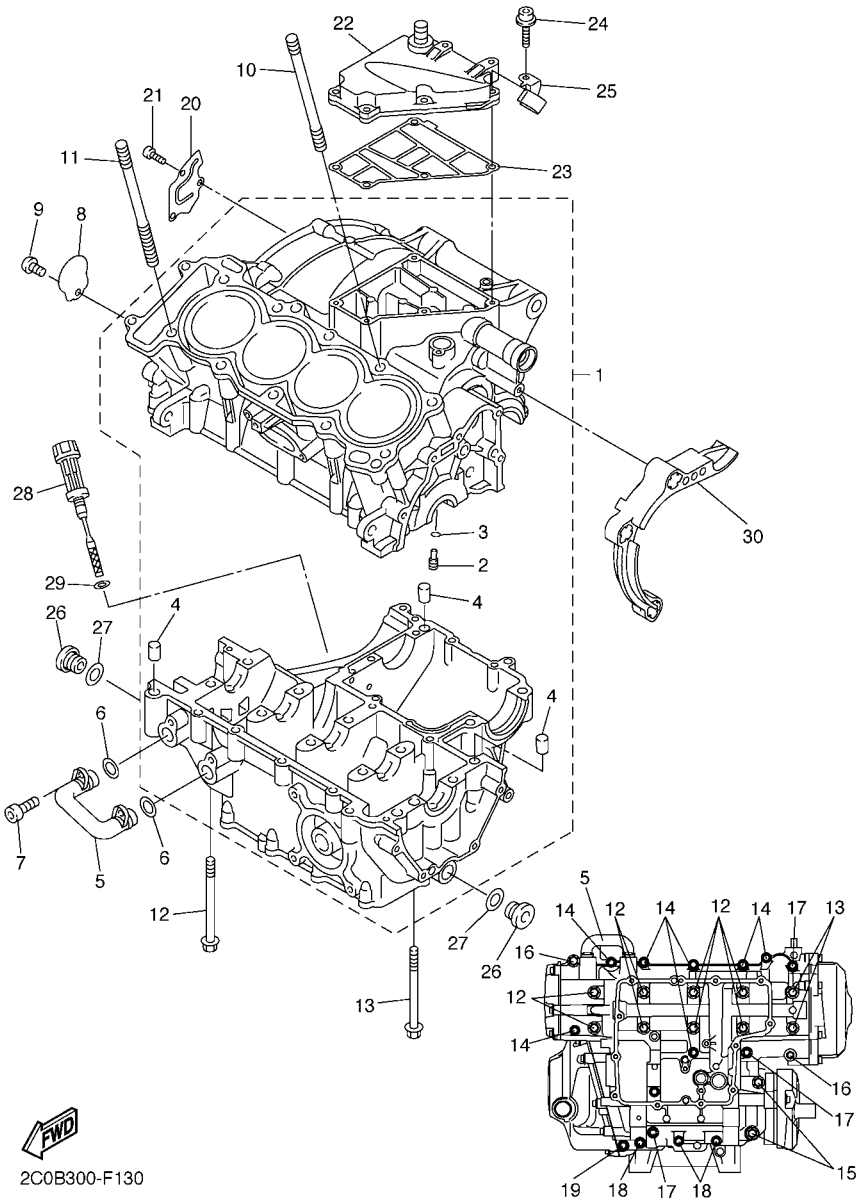

FIG. 13 CRANKCASE

REF. NO.	PART NO.	DESCRIPTION	13SL	13SN				REMARKS
1	2C0–15100–01	CRANKCASE ASSY	1	1				
2	5EB–15155–00	.NOZZLE 3	4	4				
3	93210–04092	.O-RING	4	4				
4	99530–10014	.PIN, DOWEL	3	3				
5	5VX–13418–00	PIPE, OIL 2	1	1				
6	93210–14579	O-RING	2	2				
7	90110–06161	BOLT, HEXAGON SOCKET HEAD	2	2				
8	13S–15189–00	PLUG	1	1				
9	90149–06082	SCREW	1	1				
10	90116–10025	BOLT, STUD	1	1				
11	90116–10026	BOLT, STUD	9	9				
12	90119–08083	BOLT, WITH WASHER	8	8				
13	90119–08084	BOLT, WITH WASHER	2	2				
14	95812–06055	BOLT, FLANGE	7	7				
15	95812–08065	BOLT, FLANGE	2	2				
16	90109–06100	BOLT	2	2				
17	95812–06065	BOLT, FLANGE	3	3				
18	95812–06045	BOLT, FLANGE	3	3				
19	95812–06030	BOLT, FLANGE	1	1				
20	2C0–11165–00	PLATE, BREATHER	1	1				
21	90149–06082	SCREW	3	3				
22	2C0–15413–02	COVER	1	1				
23	2C0–15462–01	GASKET, CRANKCASE COVER 3	1	1				
24	90110–06326	BOLT, HEXAGON SOCKET HEAD	5	5				
25	2C0–24136–10	CLAMP 2	1	1				
26	36Y–15189–00	PLUG	2	2				
27	93210–16325	O-RING	2	2				

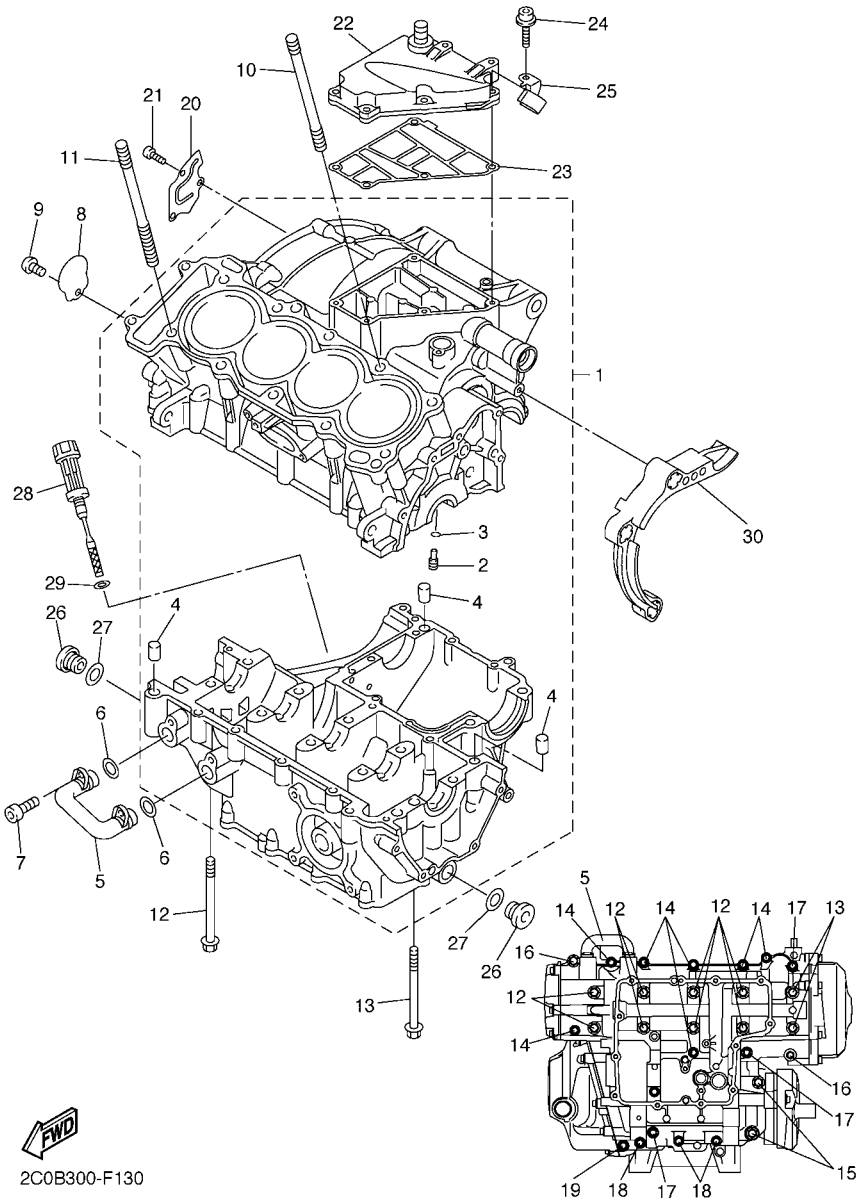

FIG. 13 CRANKCASE

REF. NO.	PART NO.	DESCRIPTION	13SL	13SN				REMARKS
28	2C0–15362–00	PLUG, OIL LEVEL	1	1				
29	93210–09165	O-RING	1	1				
30	2C0–15377–00	GUIDE, INLET	1	1				

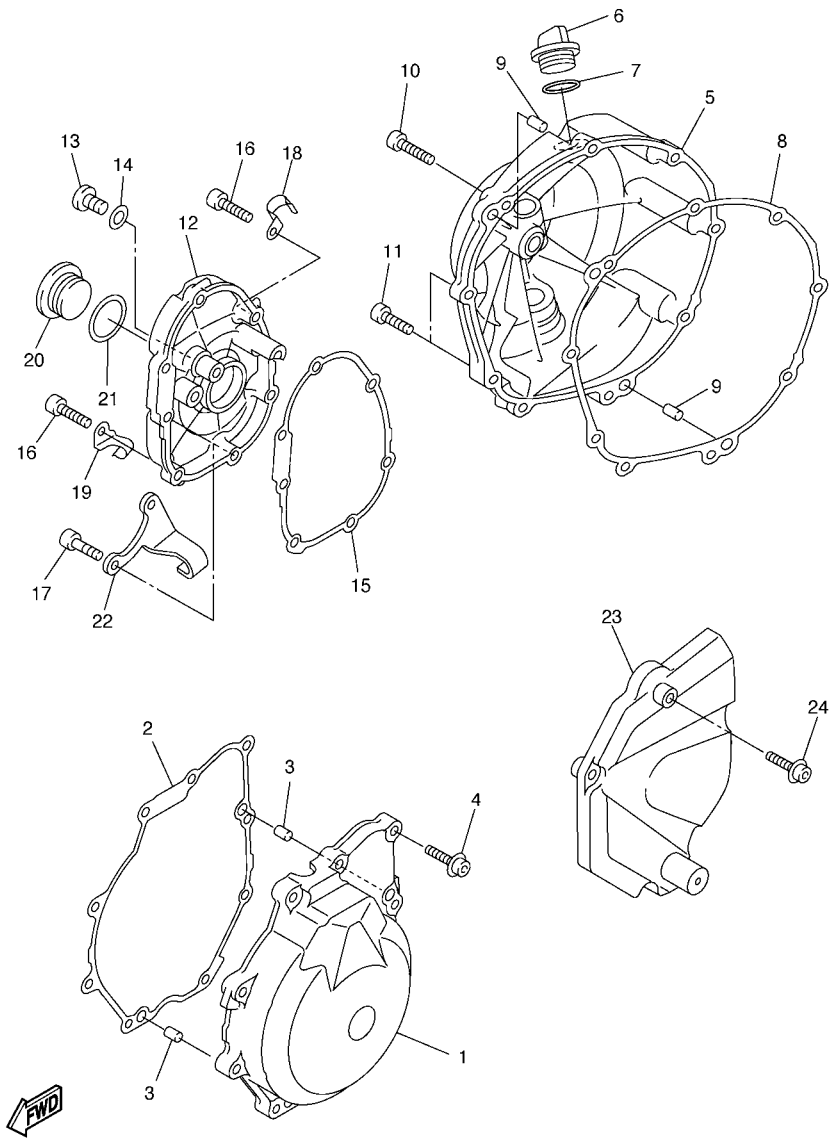

2C01300-E140

FIG. 14 CRANKCASE COVER 1

REF. NO.	PART NO.	DESCRIPTION	13SL	13SN				REMARKS
1	2C0–15411–01	COVER, CRANKCASE 1	1	1				
2	2C0–15451–01	GASKET, CRANKCASE COVER 1	1	1				
3	99530–08012	PIN, DOWEL	2	2				
4	90110–06326	BOLT, HEXAGON SOCKET HEAD	9	9				
5	2C0–15421–00	COVER, CRANKCASE 2	1	1				
6	3F9–15362–10	PLUG, OIL LEVEL	1	1				
7	93210–27194	O-RING	1	1				
8	2C0–15461–01	GASKET, CRANKCASE COVER 2	1	1				
9	93608–17263	PIN, DOWEL	2	2				
10	90110–06323	BOLT, HEXAGON SOCKET HEAD	7	7				
11	90110–06324	BOLT, HEXAGON SOCKET HEAD	2	2				
12	2C0–15416–00	COVER, OIL PUMP	1	1				
13	92014–08014	BOLT, BUTTON HEAD	1	1				
14	90430–08143	GASKET	1	1				
15	2C0–15456–01	GASKET, OIL PUMP COVER 1	1	1				
16	90110–06331	BOLT, HEXAGON SOCKET HEAD	5	5				
17	90110–06326	BOLT, HEXAGON SOCKET HEAD	2	2				
18	90465–08395	CLAMP	1	1				
19	2C0–21823–00	CLAMP, HOSE	1	1				
20	90340–32004	PLUG, STRAIGHT SCREW	1	1				
21	93210–32172	O-RING	1	1				
22	2C0–15441–00	HOLDER, CLUTCH CABLE	1	1				
23	2C0–15418–00	COVER, CHAIN CASE	1	1				
24	90110–06060	BOLT, HEXAGON SOCKET HEAD	3	3				

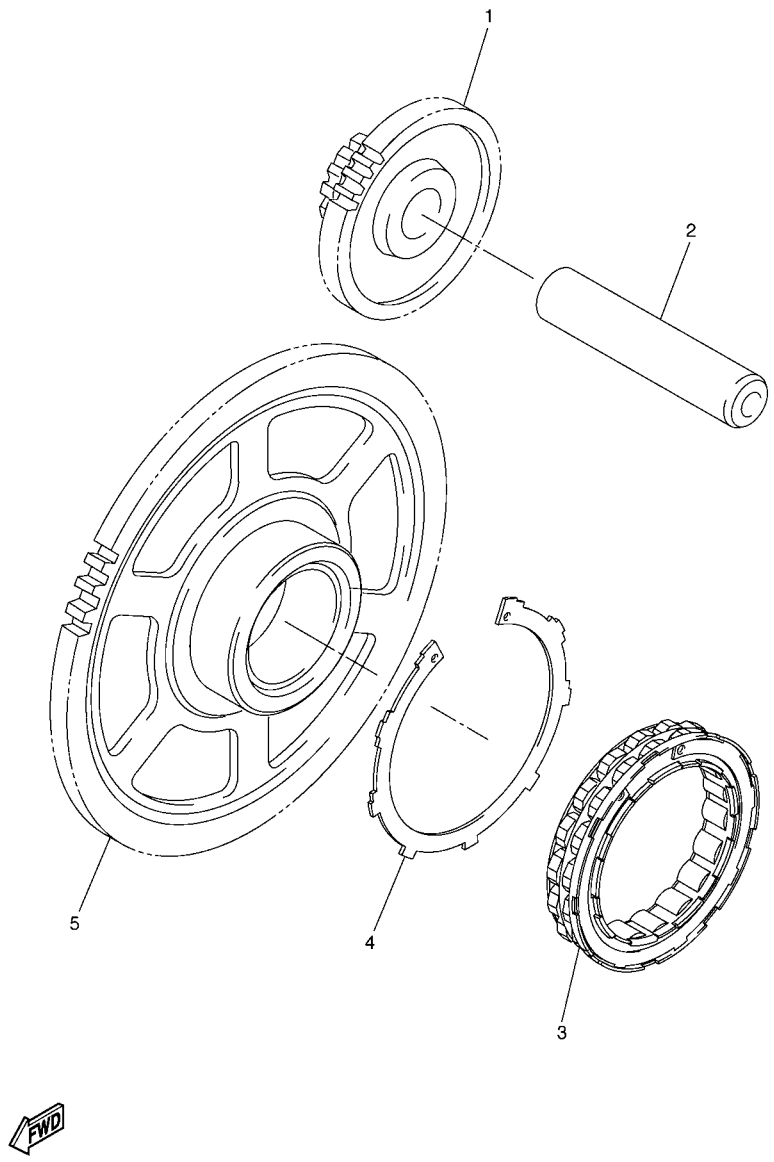

FIG. 15 STARTER

REF. NO.	PART NO.	DESCRIPTION	13SL	13SN				REMARKS
1	2C0–15512–00	GEAR, IDLER 1	1	1				
2	5MT–15521–00	SHAFT 1	1	1				
3	2C0–15580–00	STARTER CLUTCH OUTER ASSY	1	1				
4	2C0–15536–00	CLIP, STARTER	1	1				
5	2C0–15515–00	GEAR 3	1	1				

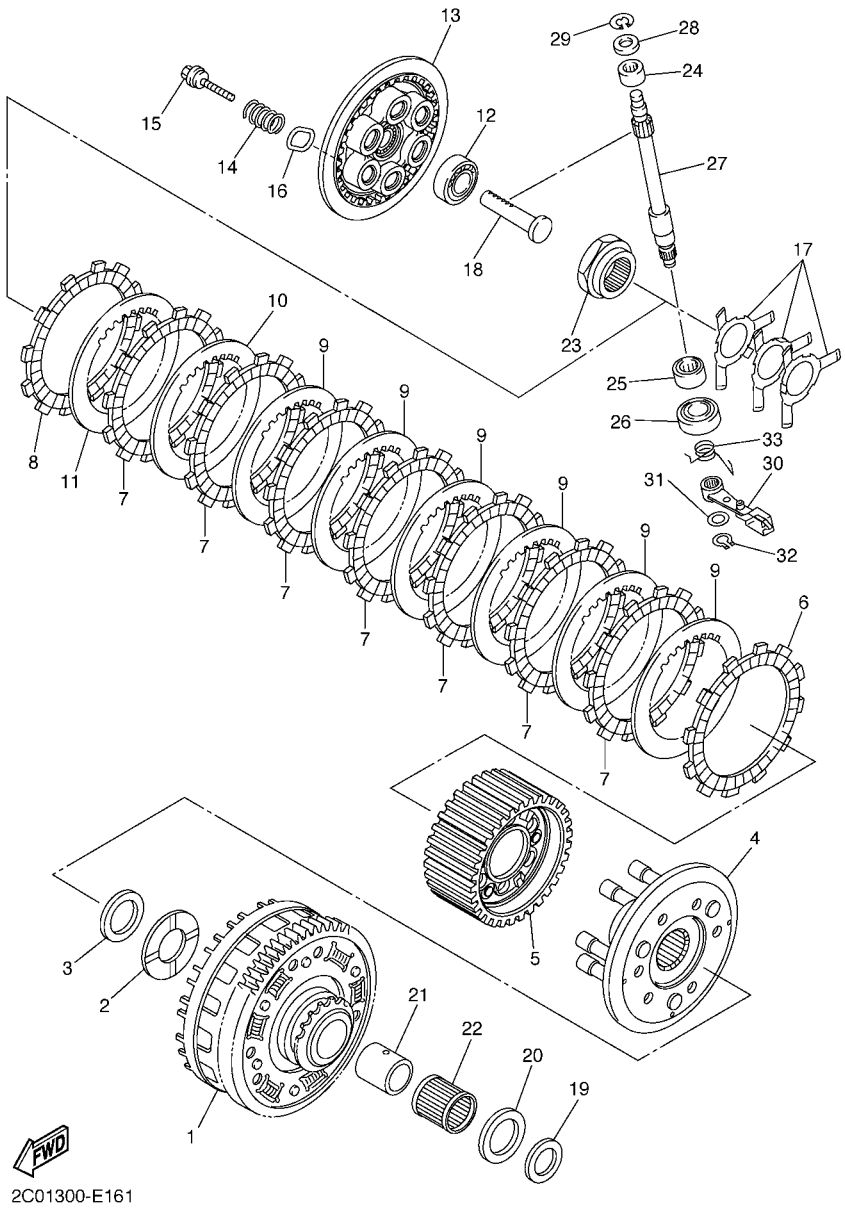

FIG. 16 CLUTCH

REF. NO.	PART NO.	DESCRIPTION	13SL	13SN				REMARKS
1	2C0–16150–00	PRIMARY DRIVEN GEAR COMP.	1	1				
2	2C0–16154–00	PLATE, THRUST 1	1	1				
3	90208–25002	WASHER, CONICAL SPRING	1	1				
4	2C0–16360–00	PRESSURE PLATE ASSY 2	1	1				
5	2C0–16370–00	CLUTCH BOSS ASSY	1	1				
6	5SL–16321–00	PLATE, FRICTION	1	1				
7	5LV–16321–20	PLATE, FRICTION	7	7				
8	4FN–16321–00	PLATE, FRICTION	1	1				
9	3J2–16324–00	PLATE, CLUTCH 1 (T=2.0)	6	6				
10	3J2–16324–00	PLATE, CLUTCH 1 (T=2.0)	1	1				UR
	168–16324–00	PLATE, CLUTCH 1 (T=2.3)	1	1				UR
11	3J2–16324–00	PLATE, CLUTCH 1 (T=2.0)	1	1				UR
	168–16325–00	PLATE, CLUTCH 2 (T=1.6)	1	1				UR
	168–16324–00	PLATE, CLUTCH 1 (T=2.3)	1	1				UR
12	93306–00106	BEARING	1	1				
13	2C0–16351–00	PLATE, PRESSURE 1	1	1				
14	90501–220A2	SPRING, COMPRESSION	6	6				
15	90159–06024	SCREW, WITH WASHER	6	6				
16	2C0–16384–00	PLATE, SEAT	6	6				
17	13S–16539–00	SPRING	3	3				
18	2C0–16356–00	ROD, PUSH 1	1	1				
19	2C0–16164–00	PLATE, THRUST 2	1	1				
20	1AE–16164–00	PLATE, THRUST 2	1	1				
21	90387–25024	COLLAR	1	1				
22	93310–340N8	BEARING	1	1				
23	2C0–16377–00	NUT, LOCK	1	1				
24	93317–11096	BEARING	1	1				

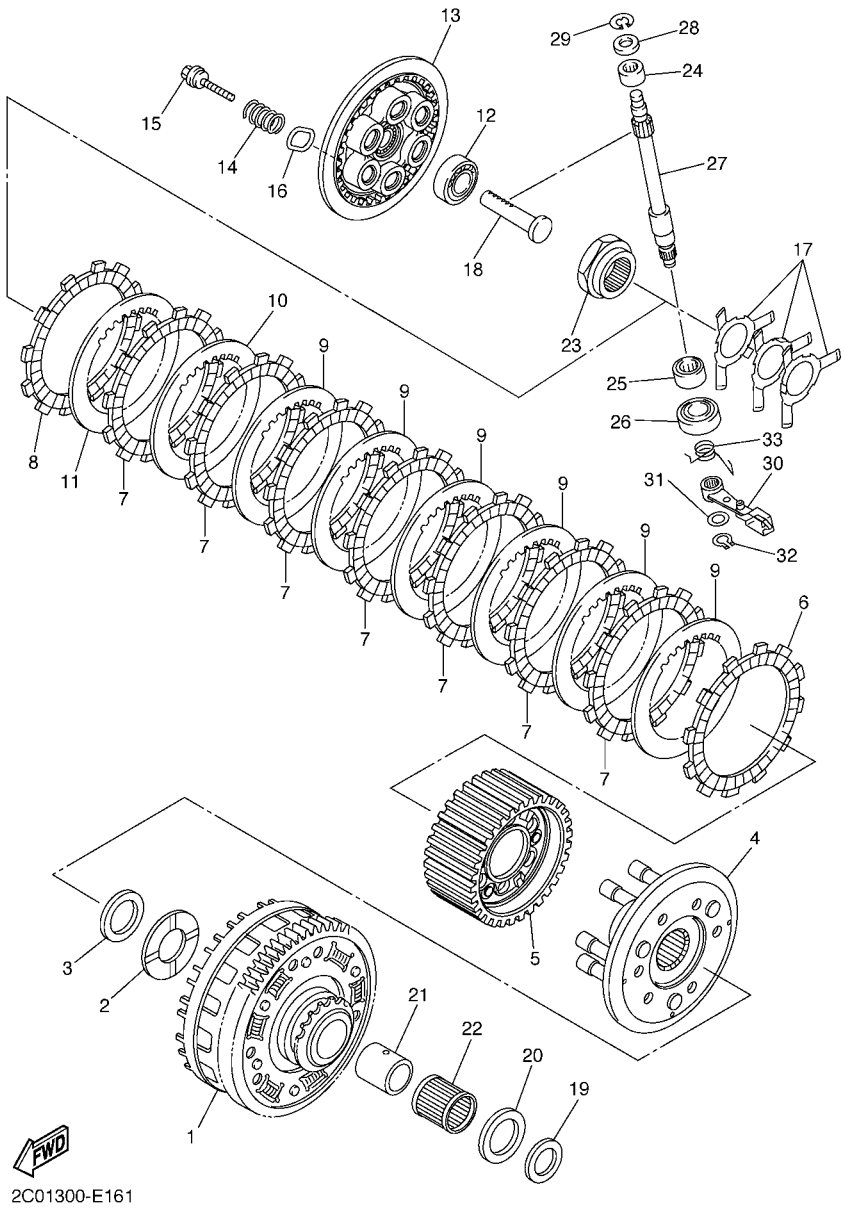

FIG. 16 CLUTCH

REF. NO.	PART NO.	DESCRIPTION	13SL	13SN				REMARKS
25	93315–21570	BEARING	1	1				
26	93102–15212	OIL SEAL	1	1				
27	2C0–16382–00	AXLE, PUSH LEVER	1	1				
28	92907–08600	WASHER, PLATE	1	1				
29	99001–07600	CIRCLIP	1	1				
30	2C0–16340–00	PUSH LEVER ASSY	1	1				
31	90201–10029	WASHER, PLATE	1	1				
32	99009–10400	CIRCLIP	1	1				
33	90508–16052	SPRING, TORSION	1	1				

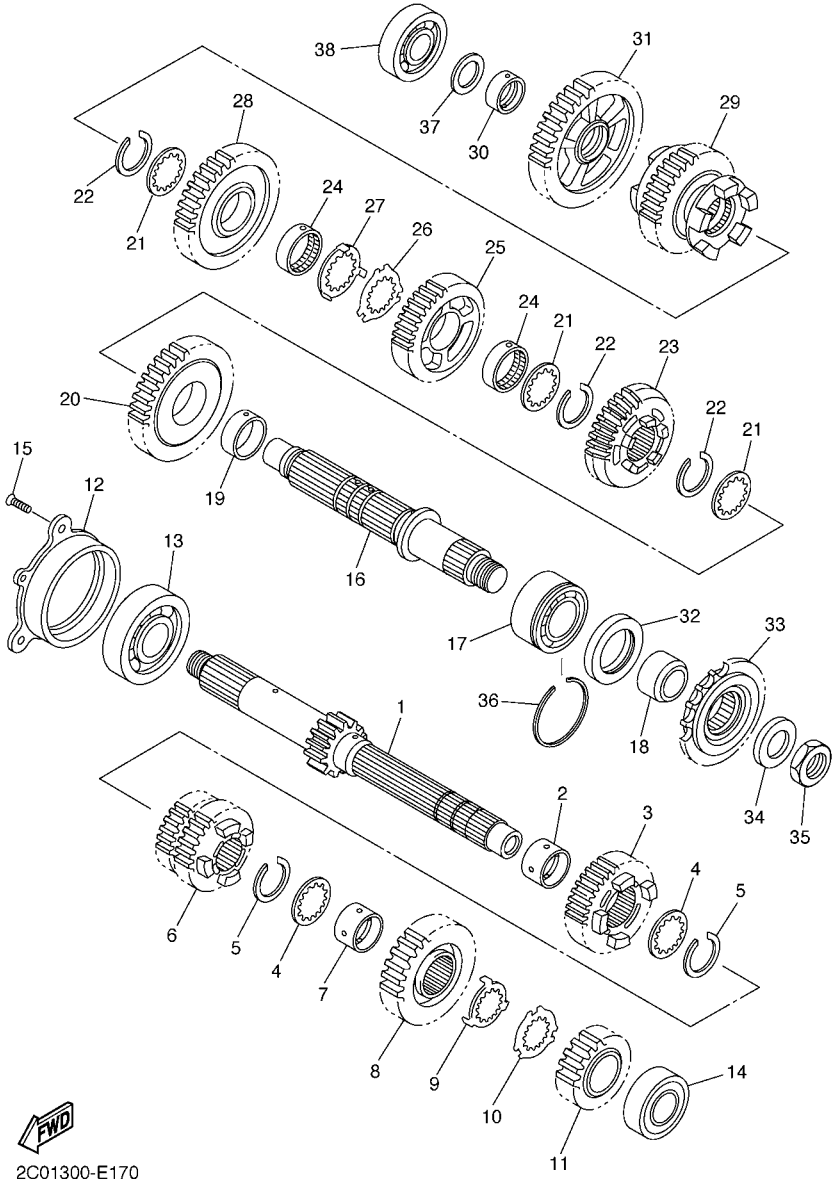

FIG. 17 TRANSMISSION

REF. NO.	PART NO.	DESCRIPTION	13SL	13SN				REMARKS
1	2C0–17411–00	AXLE, MAIN (12T)	1	1				
2	90387–250R3	COLLAR	1	1				
3	13S–17151–00	GEAR, 5TH PINION (21T)	1	1				
4	90209–21332	WASHER	2	2				
5	93440–25186	CIRCLIP	2	2				
6	13S–17131–00	GEAR, 3RD PINION (18T/18T)	1	1				
7	90387–21003	COLLAR	1	1				
8	2C0–17161–00	GEAR, 6TH PINION (20T)	1	1				
9	90209–22352	WASHER	1	1				
10	90209–21351	WASHER	1	1				
11	13S–17121–00	GEAR, 2ND PINION (16T)	1	1				
12	2C0–15163–00	HOUSING, BEARING 1	1	1				
13	93306–20562	BEARING	1	1				
14	93306–20464	BEARING	1	1				
15	90151–06024	SCREW, COUNTERSUNK	3	3				
16	2C0–17421–00	AXLE, DRIVE	1	1				
17	93305–20509	BEARING	1	1				
18	90387–25016	COLLAR	1	1				
19	90387–28011	COLLAR	1	1				
20	13S–17221–00	GEAR, 2ND WHEEL (32T)	1	1				
21	90209–25011	WASHER	3	3				
22	93440–28184	CIRCLIP	3	3				
23	2C0–17261–00	GEAR, 6TH WHEEL (23T)	1	1				
24	90387–25015	COLLAR	2	2				
25	2C0–17241–00	GEAR, 4TH WHEEL (26T)	1	1				
26	90214–25004	WASHER, CLAW	1	1				
27	90214–25003	WASHER, CLAW	1	1				

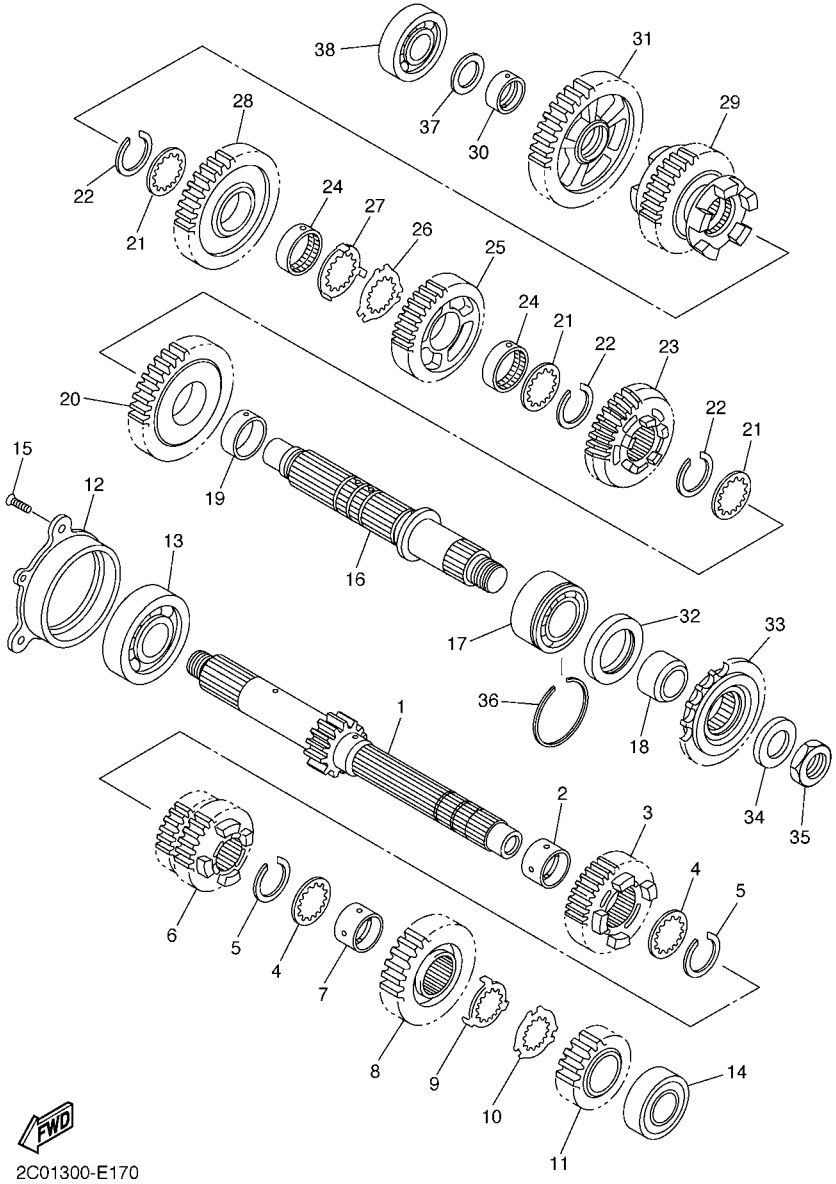

FIG. 17 TRANSMISSION

REF. NO.	PART NO.	DESCRIPTION	13SL	13SN				REMARKS
28	2C0–17231–00	GEAR, 3RD WHEEL (30T)	1	1				
29	13S–17251–00	GEAR, 5TH WHEEL (27T)	1	1				
30	90387–21004	COLLAR	1	1				
31	2C0–17211–00	GEAR, 1ST WHEEL (31T)	1	1				
32	93102–35017	OIL SEAL	1	1				
33	2C0–17460–00	SPROCKET,DRIVE (16T)	1	1				
34	90201–20023	WASHER, PLATE	1	1				
35	90179–20011	NUT	1	1				
36	93440–52014	CIRCLIP	1	1				
37	90201–20278	WASHER, PLATE	1	1				
38	93306–20464	BEARING	1	1				

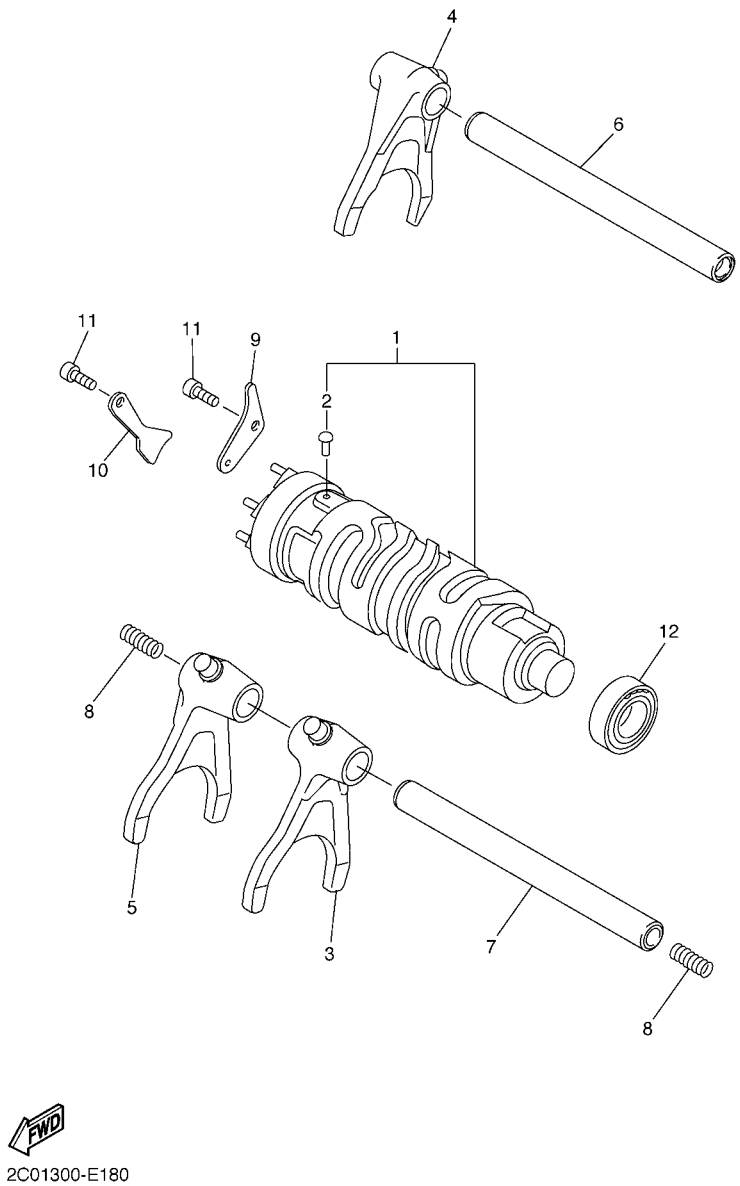

FIG. 18 SHIFT CAM & FORK

REF. NO.	PART NO.	DESCRIPTION	13SL	13SN				REMARKS
1	2C0–18540–00	SHIFT CAM ASSY	1	1				
2	136–18542–00	.POINT, NEUTRAL	1	1				
3	2C0–18511–00	FORK, SHIFT 1	1	1				
4	2C0–18512–00	FORK, SHIFT 2	1	1				
5	2C0–18513–00	FORK, SHIFT 3	1	1				
6	2C0–18531–00	BAR, SHIFT FORK GUIDE 1	1	1				
7	2C0–18535–00	BAR, SHIFT FORK GUIDE 2	1	1				
8	90501–080A2	SPRING, COMPRESSION	2	2				
9	2C0–18536–00	STOPPER, SHIFT BAR	1	1				
10	2C0–18562–00	PLATE, STOPPER 2	1	1				
11	90110–06182	BOLT, HEXAGON SOCKET HEAD	2	2				
12	93306–00106	BEARING	1	1				

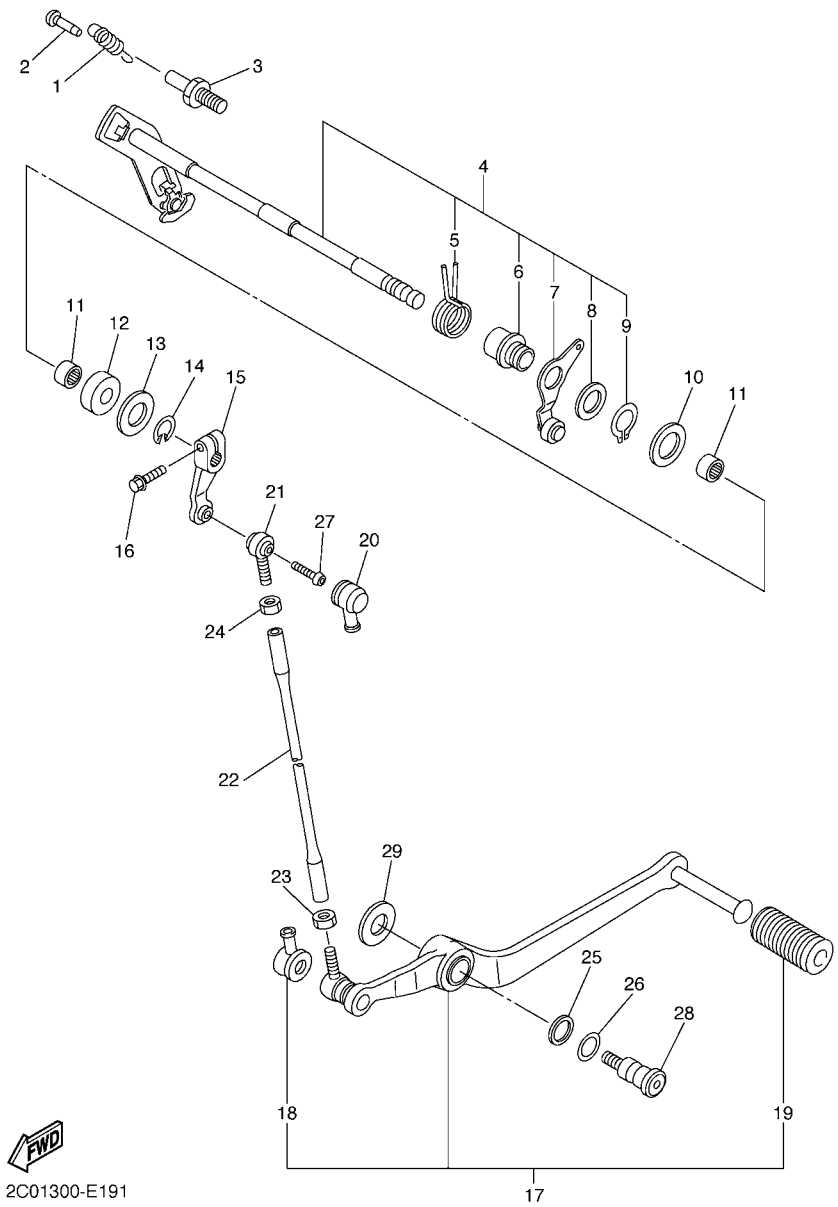

FIG. 19 SHIFT SHAFT

REF. NO.	PART NO.	DESCRIPTION	13SL	13SN				REMARKS
1	2C0–18144–00	HANGER, SPRING	1	1				
2	132–16346–00	HOOK, SPRING	1	1				
3	1D7–18127–00	STOPPER, SCREW	1	1				
4	2C0–18101–00	SHIFT SHAFT ASSY	1	1				
5	90508–32020	.SPRING, TORSION	1	1				
6	2C0–18175–00	.SPACER	1	1				
7	2C0–18140–00	.STOPPER LEVER ASSY	1	1				
8	90201–177G4	.WASHER, PLATE	1	1				
9	99009–17400	.CIRCLIP	1	1				
10	90201–127E1	WASHER, PLATE	1	1				
11	93317–11295	BEARING	2	2				
12	93102–12106	OIL SEAL (SD 12-22-5 HS)	1	1				
13	90201–12575	WASHER, PLATE	1	1				
14	99001–10600	CIRCLIP	1	1				
15	5PW–18112–00	ARM, SHIFT	1	1				
16	95822–06020	BOLT, FLANGE	1	1				
17	2C0–18110–01	SHIFT PEDAL ASSY	1	1				
18	2H9–18154–00	.COVER, DUST	1	1				
19	5EB–18113–00	.COVER, SHIFT PEDAL	1	1				
20	4XV–18154–00	COVER, DUST	1	1				
21	5LV–18116–00	JOINT, ROD 1	1	1				
22	2C0–18115–00	ROD, SHIFT	1	1				
23	90170–08358	NUT	1	1				
24	95304–06700	NUT	1	1				
25	90201–12013	WASHER, PLATE	1	1				
26	90206–12074	WASHER, WAVE	1	1				
27	90111–06019	BOLT,HEX. SOCKET BUTTON	1	1				

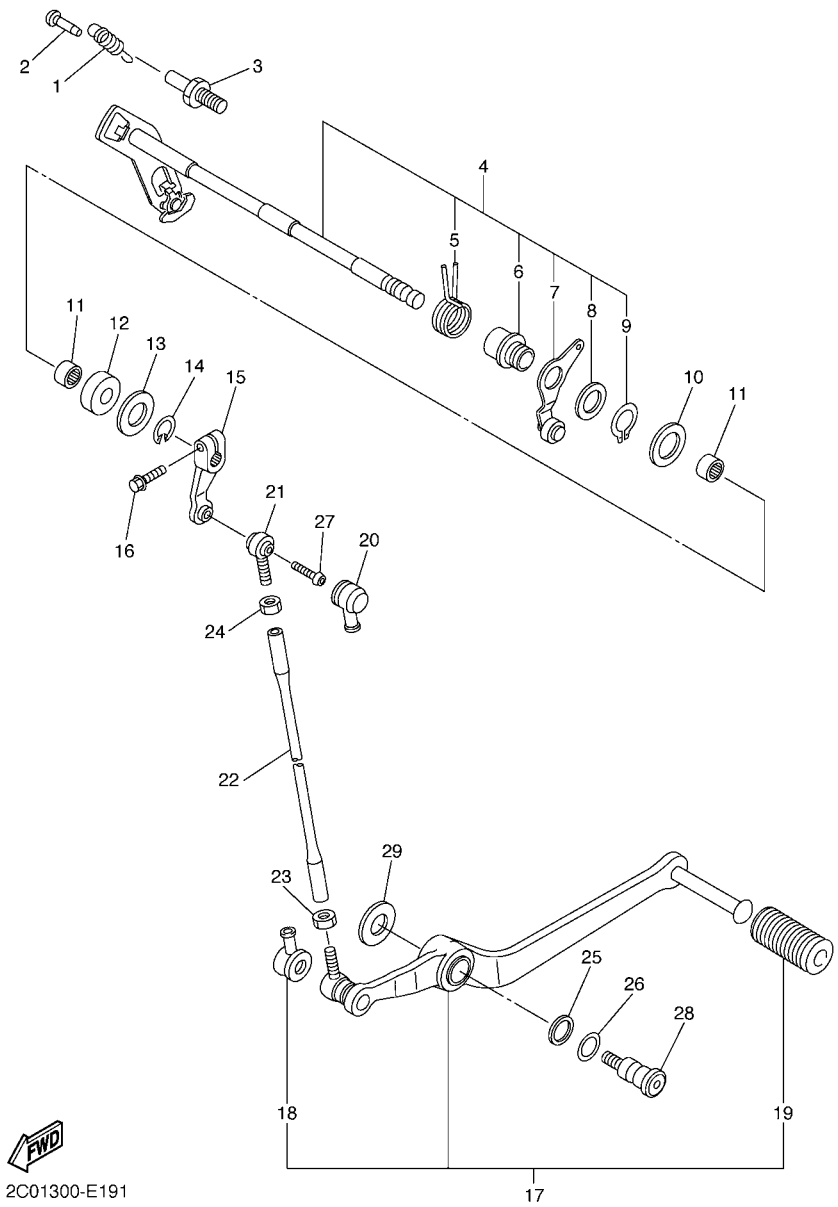

FIG. 19 SHIFT SHAFT

REF. NO.	PART NO.	DESCRIPTION	13SL	13SN				REMARKS
28	4BP–27434–01	BOLT	1	1				
29	90201–08784	WASHER, PLATE	1	1				

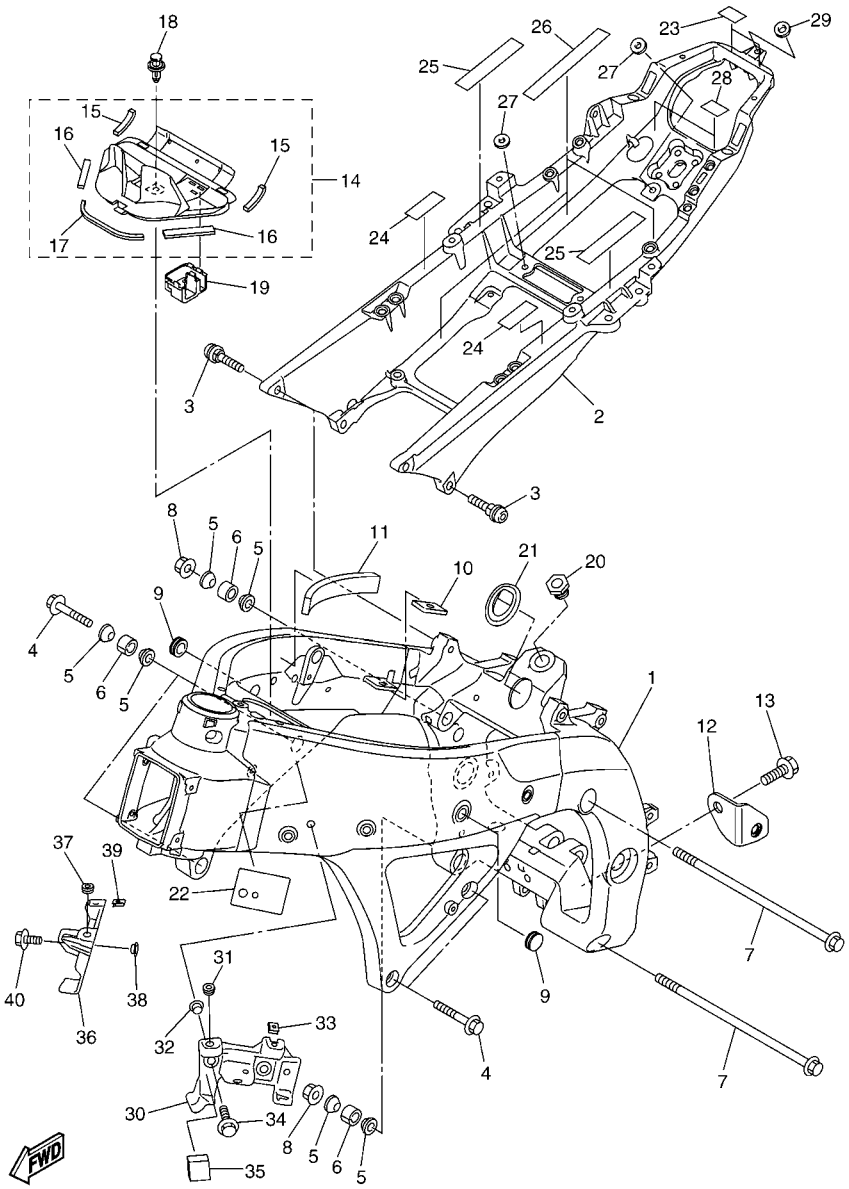

FIG. 20 FRAME

REF. NO.	PART NO.	DESCRIPTION	13SL	13SN				REMARKS
1	13S–21110–10	FRAME COMP.	1	1				
2	13S–21190–00	REAR FRAME COMP.	1	1				
3	13S–2585H–00	SCREW,SET	4	4				
4	95024–10040	BOLT, FLG.(SMALL HEAD)	4	4				
5	13S–21414–00	BOSS, ENGINE MOUNT	8	8				
6	13S–21424–00	BOSS, ENGINE MOUNT	4	4				
7	90105–12228	BOLT, FLANGE	2	2				
8	90179–12004	NUT	2	2				
9	90338–15004	PLUG	2	2				
10	2C0–24182–00	DAMPER, LOCATING 2	2	2				
11	2C0–21486–00	DAMPER 2	2	2				
12	13S–21435–00	BRACKET, MUFFLER 1	1	1				
13	90105–08171	BOLT, FLANGE	1	1				
14	13S–2110M–00	COVER ASSY 1	1	1				
15	13S–2174X–00	.DAMPER	2	2				
16	2C0–2174Y–00	.DAMPER	2	2				
17	2C0–21746–00	.DAMPER	1	1				
18	90269–07010	RIVET	1	1				
19	2C0–8258J–00	HOUSING, CONNECTOR 1	1	1				
20	2C0–22241–00	BOLT 1	1	1				
21	2C0–21279–00	PLUG, BLIND	1	1				
22	13S–2118N–10	LABEL		1				
23	2C0–21566–00	TAPE, 1	2	2				
24	2C0–21567–00	TAPE, 2	2	2				
25	13S–21566–00	TAPE, 1	2	2				
26	13S–21567–00	TAPE, 2	4	4				
27	13S–2111D–00	SEAL 1	3	3				

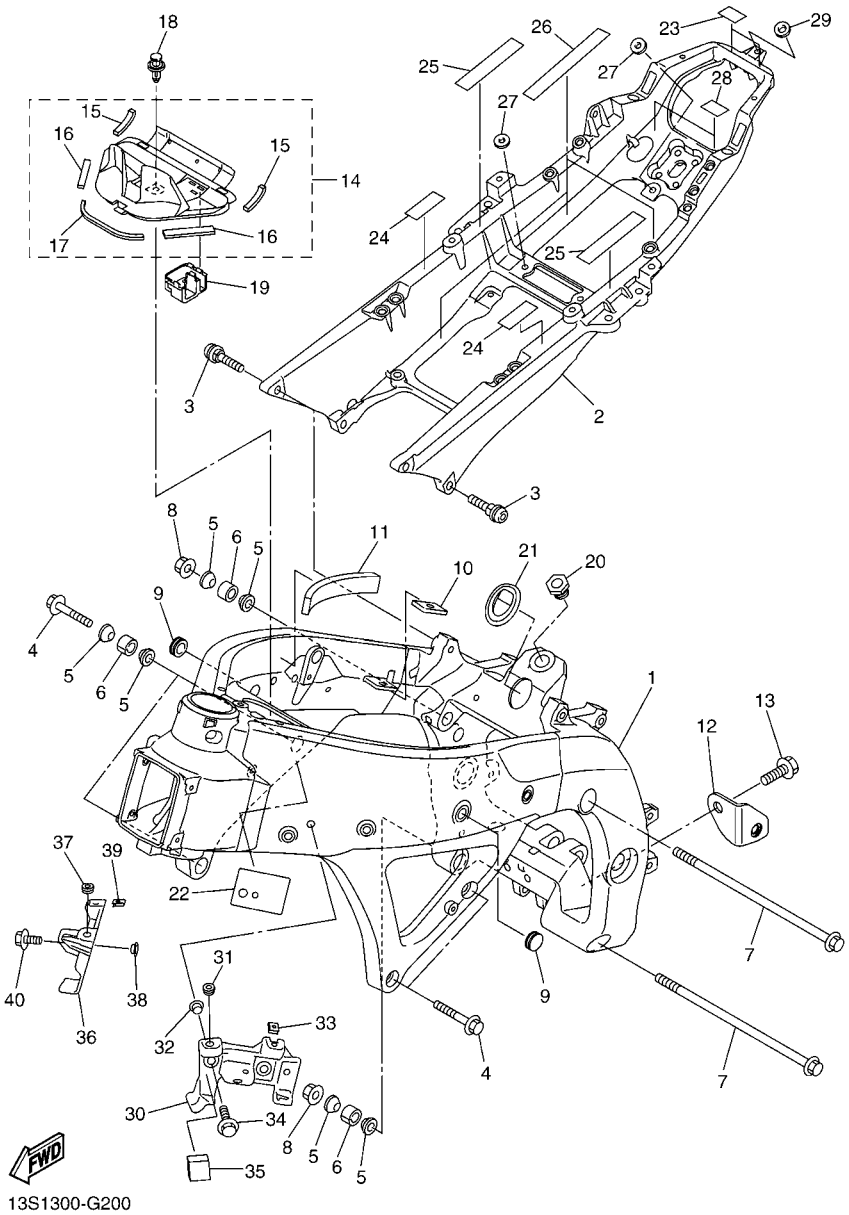

FIG. 20 FRAME

REF. NO.	PART NO.	DESCRIPTION	13SL	13SN				REMARKS
28	2C0–21566–00	TAPE, 1	2	2				
29	13S–21746–00	DAMPER	1	1				
30	13S–2833A–00	BRACKET 7	1	1				
31	90480–10003	GROMMET	1	1				
32	90387–06048	COLLAR	2	2				
33	90183–05076	NUT, SPRING	1	1				
34	95802–06020	BOLT, FLANGE	2	2				
35	13S–12679–00	DAMPER, SHROUD 6	1	1				
36	13S–2833E–00	BRACKET 8	1	1				
37	90480–10003	GROMMET	1	1				
38	90387–06048	COLLAR	2	2				
39	90183–05076	NUT, SPRING	1	1				
40	95802–06020	BOLT, FLANGE	2	2				

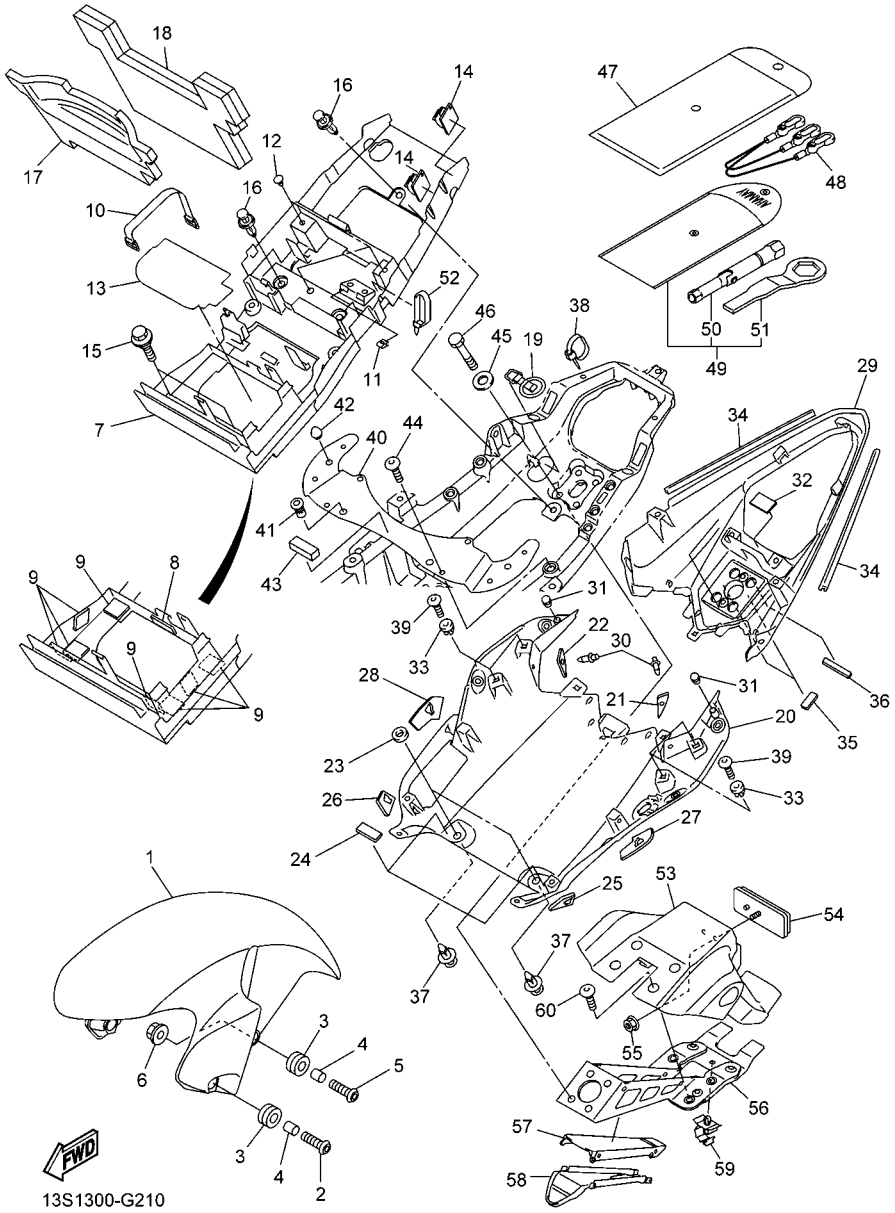

FIG. 21 FENDER

REF. NO.	PART NO.	DESCRIPTION	13SL	13SN				REMARKS
1	2C0–21511–00–P0	FENDER, FRONT	1	1				UR FOR DPBMC
	2C0–21511–00–P9	FENDER, FRONT	1	1				UR FOR BWC1
	2C0–21511–00–P2	FENDER, FRONT	1	1				UR FOR SMX
2	90111–06043	BOLT,HEX. SOCKET BUTTON	2	2				
3	90480–14003	GROMMET	4	4				
4	90387–06057	COLLAR	4	4				
5	90111–06030	BOLT,HEX. SOCKET BUTTON	2	2				
6	95702–06500	NUT, FLANGE	2	2				
7	13S–8212B–00	BOX, BATTERY 1	1	1				
8	51Y–21639–00	DAMPER 2	1	1				
9	13S–21649–00	DAMPER	8	8				
10	133–82131–00	BAND, BATTERY	1	1				
11	90183–04039	NUT, SPRING	2	2				
12	90338–06018	PLUG	3	3				
13	13S–821A1–00	SEAT BTRY. ASSY 1	1	1				
14	90464–13004	CLAMP	2	2				
15	90109–06171	BOLT	2	2				
16	90269–07010	RIVET	3	3				
17	13S–21652–00	PROTECTOR	1	1				
18	13S–24140–00	DAMPER PLATE ASSY	1	1				
19	13S–21376–00	BAND, TOOL	1	1				
20	13S–21611–00–P0	FENDER, REAR	1	1				UR FOR DPBMC
	13S–21611–00–P1	FENDER, REAR	1	1				UR FOR BWC1
	13S–21611–00–P3	FENDER, REAR	1	1				UR FOR SMX
21	13S–2172P–00	SEAT	1	1				
22	13S–2173P–00	SEAT	1	1				
23	13S–21735–00	SEAL 2	2	2				

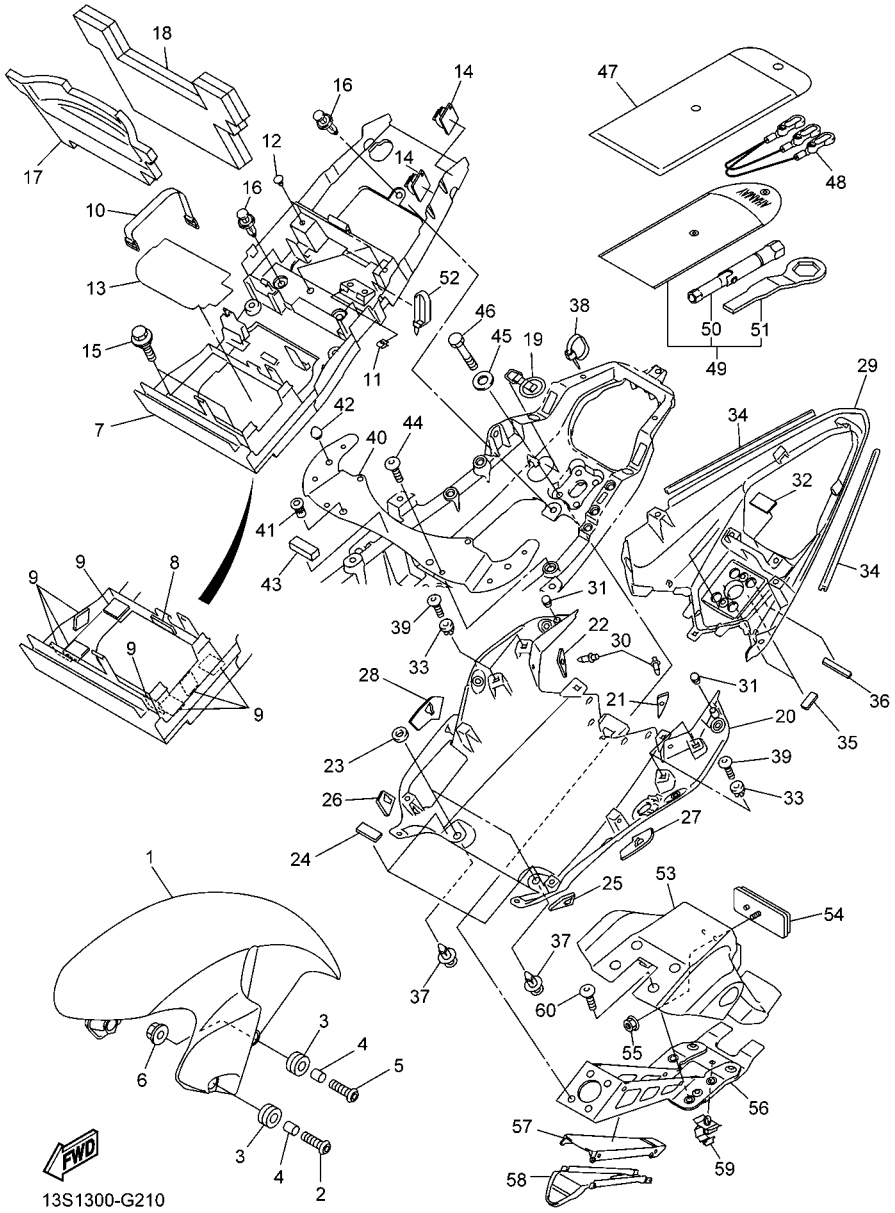

FIG. 21 FENDER

REF. NO.	PART NO.	DESCRIPTION	13SL	13SN				REMARKS
24	4D9–21717–00	DAMPER	2	2				
25	13S–21669–00	SEAL	1	1				
26	13S–216A2–00	SEAL, 2	1	1				
27	13S–216A3–00	SEAL, 3	1	1				
28	13S–216A4–00	SEAL, 4	1	1				
29	13S–2162R–00–P2	FENDER 2	1	1				UR FOR DPBMC
	13S–2162R–00–P0	FENDER 2	1	1				UR FOR BWC1
	13S–2162R–00–P3	FENDER 2	1	1				UR FOR SMX
30	90269–06001	RIVET	2	2				
31	90338–06018	PLUG	2	2				
32	5GM–27445–00	PLATE 1	1	1				
33	90480–08005	GROMMET	4	4				
34	13S–21732–00	SEAL 1	2	2				
35	13S–21575–00	SEAL 1	2	2				
36	13S–2173N–00	SEAL 4	2	2				
37	90269–07010	RIVET	2	2				
38	90464–13073	CLAMP	1	1				
39	97702–50014	SCREW, TAPPING	4	4				
40	13S–21131–00	BRACKET	1	1				
41	90179–06010	NUT	2	2				
42	4G0–21639–00	DAMPER 2	2	2				
43	5YT–24665–00	DAMPER	1	1				
44	90111–06104	BOLT,HEX. SOCKET BUTTON	4	4				
45	13S–21615–00	WASHER, SPECIAL 1	4	4				
46	90101–06056	BOLT	4	4				
47	2C0–28100–00	TOOL KIT	1	1				
48	2C0–21370–00	HELMET HANGER ASSY	1	1				

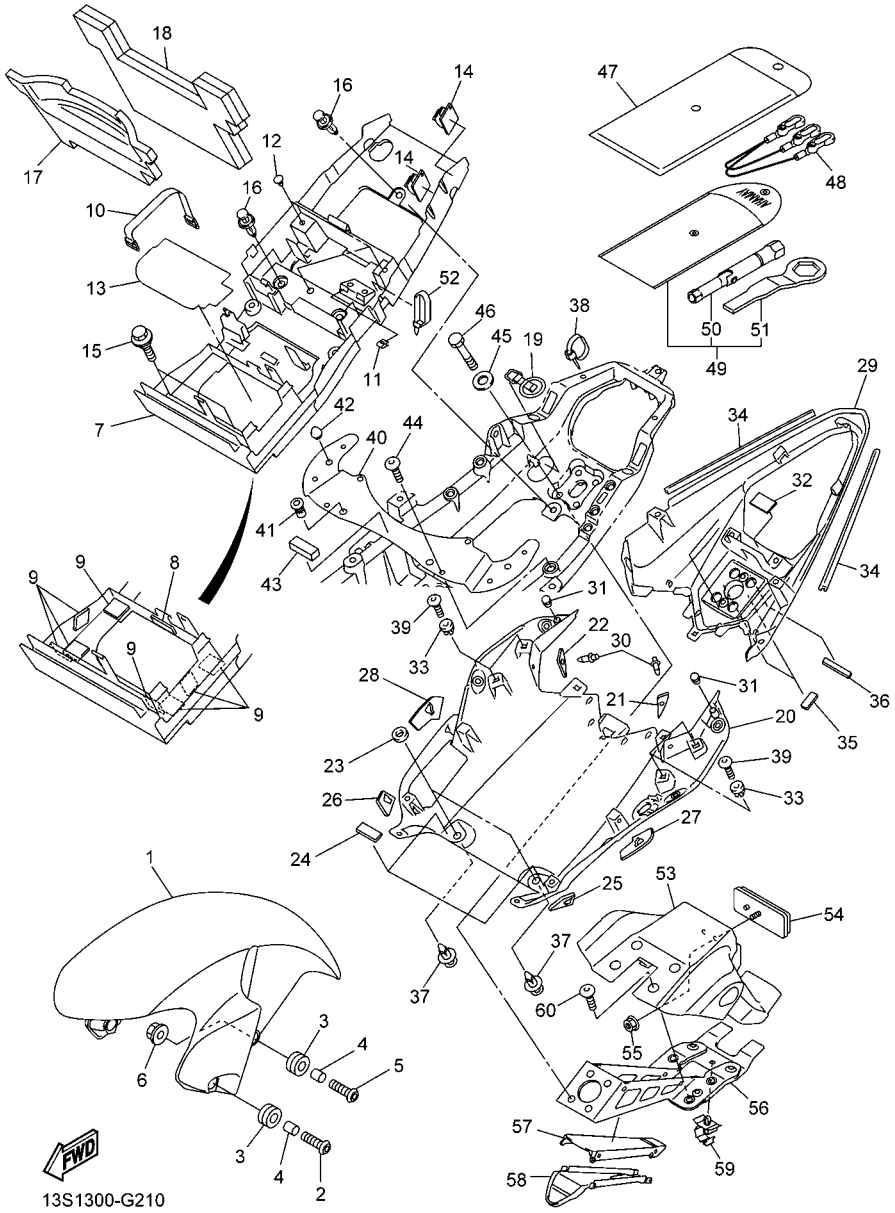

FIG. 21 FENDER

REF. NO.	PART NO.	DESCRIPTION	13SL	13SN				REMARKS
49	2C0–28110–00	TOOL KIT, 2	1	1				
50	4XV–2814F–00	.BOX, SPARK PLUG	1	1				
51	4FM–28135–00	.SPANNER, SPECIAL	1	1				
52	90465–13M11	CLAMP	1	1				
53	2C0–21629–00	GUARD, MUD	1	1				
54	3Y6–85130–02	REAR REFLECTOR ASSY	1	1				
55	95602–05200	NUT, SELF-LOCKING	1	1				
56	13S–21640–00	REAR STAY COMP.	1	1				
57	2C0–2163A–00	COVER, REAR FENDER 1	1	1				
58	2C0–2163E–00	COVER, REAR FENDER 2	1	1				
59	90464–14228	CLAMP	1	1				
60	90109–06182	BOLT	4	4				

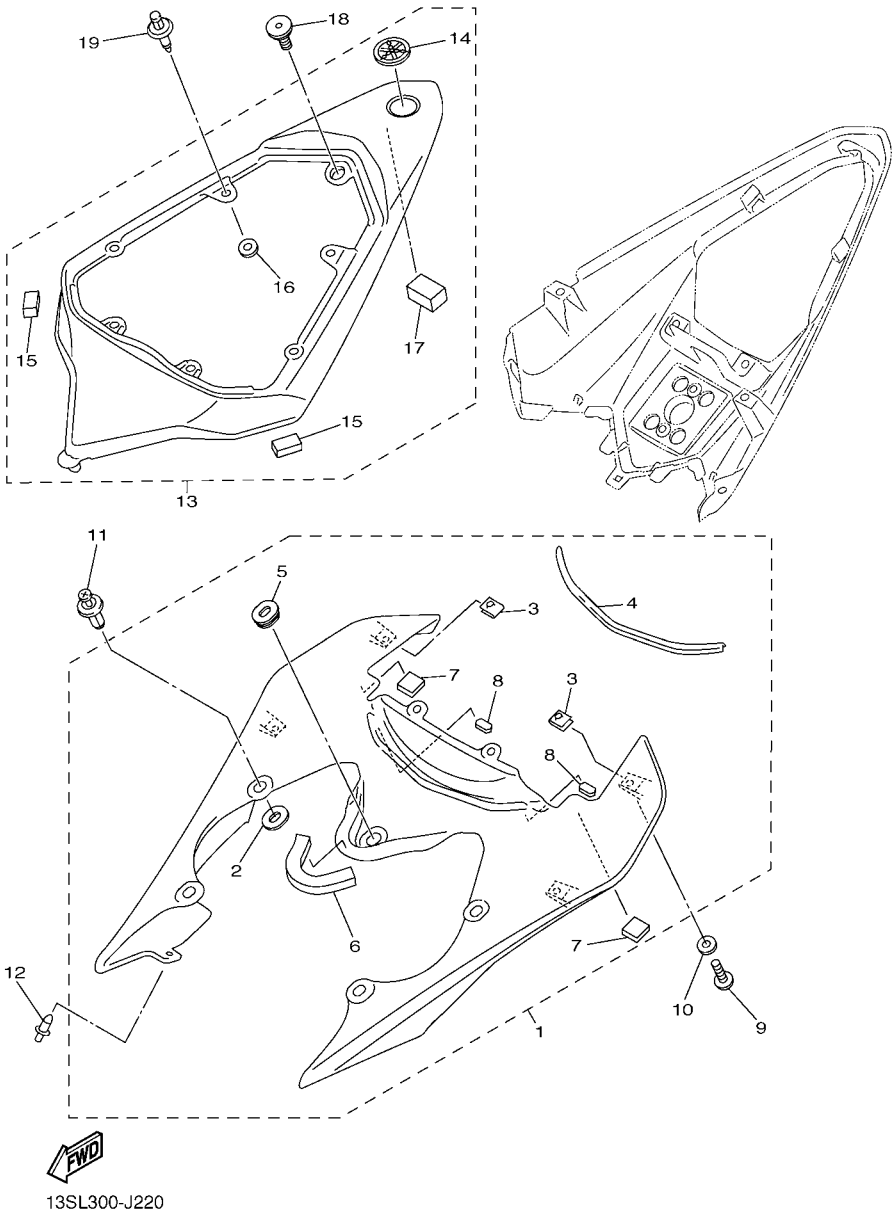

FIG. 22 SIDE COVER

REF. NO.	PART NO.	DESCRIPTION	13SL	13SN				REMARKS
1	13S–21710–00–P0	SIDE COVER ASSY 1	1	1				UR FOR DPBMC
	13S–21710–00–P1	SIDE COVER ASSY 1	1	1				UR FOR BWC1
	13S–21710–00–P3	SIDE COVER ASSY 1	1	1				UR FOR SMX
2	5PW–2174X–00	.DAMPER	4	4				
3	90183–05076	.NUT, SPRING	4	4				
4	13S–2171L–00	.MOLE, SIDE COVER 1	1	1				
5	90480–01558	.GROMMET	1	1				
6	2C0–28237–00	.DAMPER 3	1	1				
7	1UF–15379–00	.SEAL	2	2				
8	5SL–28416–00	.DAMPER 2	2	2				
9	90111–05003	BOLT,HEX. SOCKET BUTTON	4	4				
10	90202–05180	WASHER, PLATE	4	4				
11	90269–07076	RIVET	4	4				
12	90269–06008	RIVET	2	2				
13	13S–21720–00–P2	SIDE COVER ASSY 2	1	1				UR FOR DPBMC
	13S–21720–00–P0	SIDE COVER ASSY 2	1	1				UR FOR BWC1
	13S–21720–00–P3	SIDE COVER ASSY 2	1	1				UR FOR SMX
14	4KN–2836B–10	.TUNING FORK MARK	1	1				
15	13S–21639–00	.DAMPER 2	2	2				
16	5SL–84753–00	.DAMPER	2	2				
17	4J2–21778–00	.DAMPER, LOCATING 1	1	1				
18	90109–06248	BOLT	1	1				
19	90269–06001	RIVET	6	6				

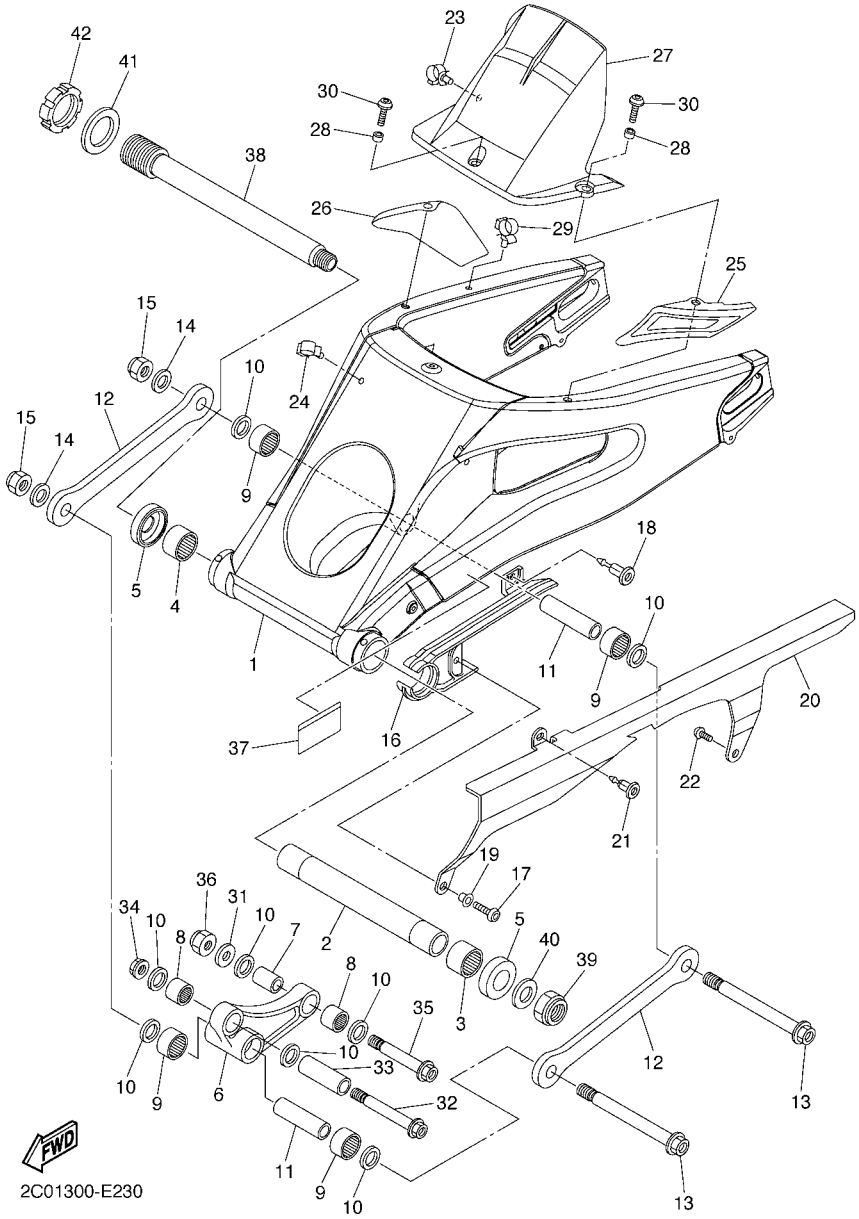

FIG. 23 REAR ARM

REF. NO.	PART NO.	DESCRIPTION	13SL	13SN				REMARKS
1	13S–22110–00	REAR ARM COMP.	1	1				
2	2C0–22184–00	BUSH	1	1				
3	93317–330A0	BEARING	1	1				
4	93317–330A1	BEARING	1	1				
5	2C0–22128–00	COVER, THRUST 1	2	2				
6	2C0–2217A–00	ARM, RELAY	1	1				
7	90387–127W0	COLLAR	1	1				
8	93315–31759	BEARING	2	2				
9	93315–31758	BEARING	4	4				
10	93109–17071	OIL SEAL	8	8				
11	90387–126Y1	COLLAR	2	2				
12	2C0–2217M–00	ARM 1	2	2				
13	90109–12010	BOLT	2	2				
14	92902–12600	WASHER, PLATE	2	2				
15	90185–12119	NUT, SELF-LOCKING	2	2				
16	2C0–22151–00	SEAL, GUARD	1	1				
17	92012–06016	BOLT, BUTTON HEAD	1	1				
18	90269–07008	RIVET	1	1				
19	90387–062X0	COLLAR	1	1				
20	2C0–22311–00	CASE, CHAIN	1	1				
21	90269–07007	RIVET	1	1				
22	90110–06102	BOLT, HEXAGON SOCKET HEAD	1	1				
23	90464–16012	CLAMP	1	1				
24	90464–16011	CLAMP	1	1				
25	2C0–228A0–00	COVER ASSY 1	1	1				
26	2C0–228B0–00	COVER ASSY 2	1	1				
27	2C0–21650–00	REAR FENDER COMP.	1	1				

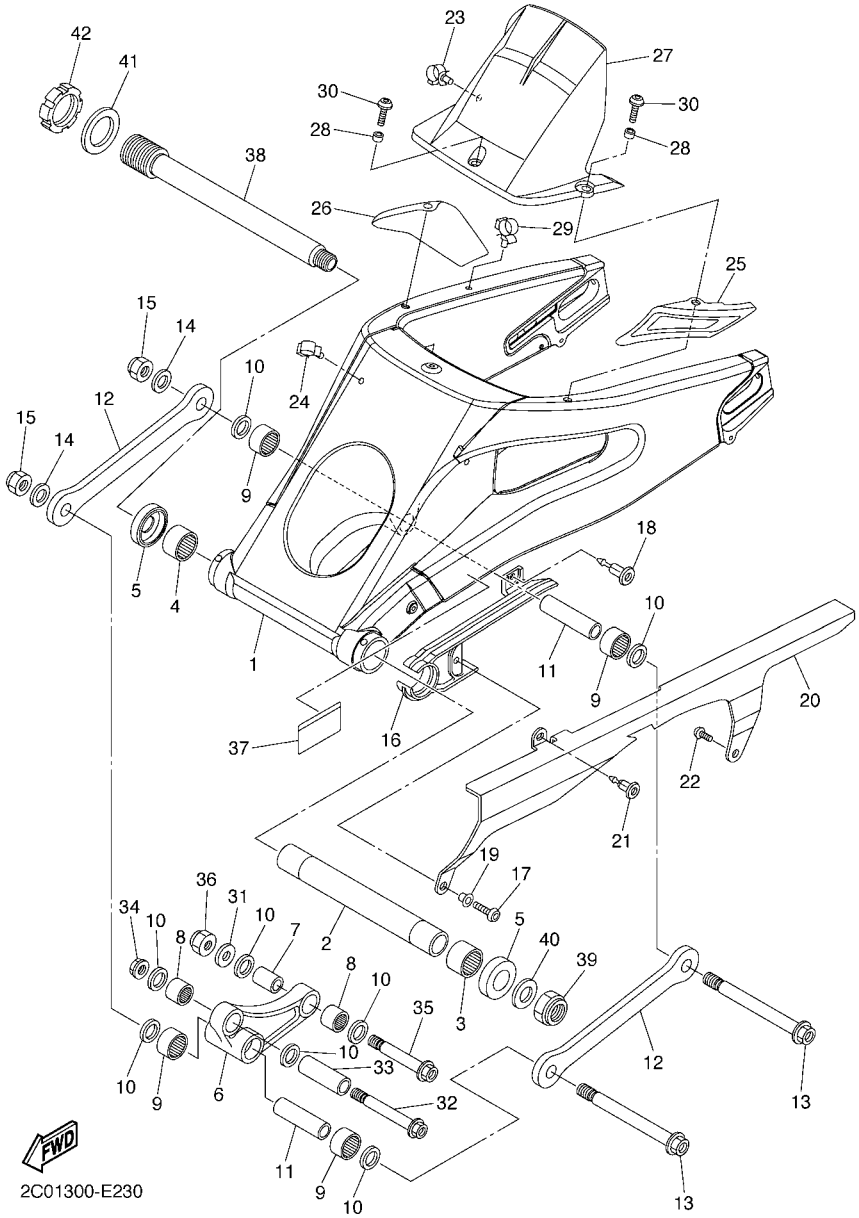

FIG. 23 REAR ARM

REF. NO.	PART NO.	DESCRIPTION	13SL	13SN				REMARKS
28	90387–06022	COLLAR	3	3				
29	90464–16012	CLAMP	1	1				
30	90111–06038	BOLT,HEX. SOCKET BUTTON	3	3				
31	92902–12600	WASHER, PLATE	1	1				
32	90109–10017	BOLT	1	1				
33	90387–1012B	COLLAR	1	1				
34	95602–10200	NUT, U FLANGE	1	1				
35	90109–12011	BOLT	1	1				
36	90185–12119	NUT, SELF-LOCKING	1	1				
37	14B–21668–00	LABEL, TIRE	1	1				
38	2C0–22141–10	SHAFT, PIVOT	1	1				
39	90185–22002	NUT, SELF-LOCKING	1	1				
40	90201–22014	WASHER, PLATE	1	1				
41	90201–33014	WASHER, PLATE	1	1				
42	2C0–22252–00	NUT	1	1				

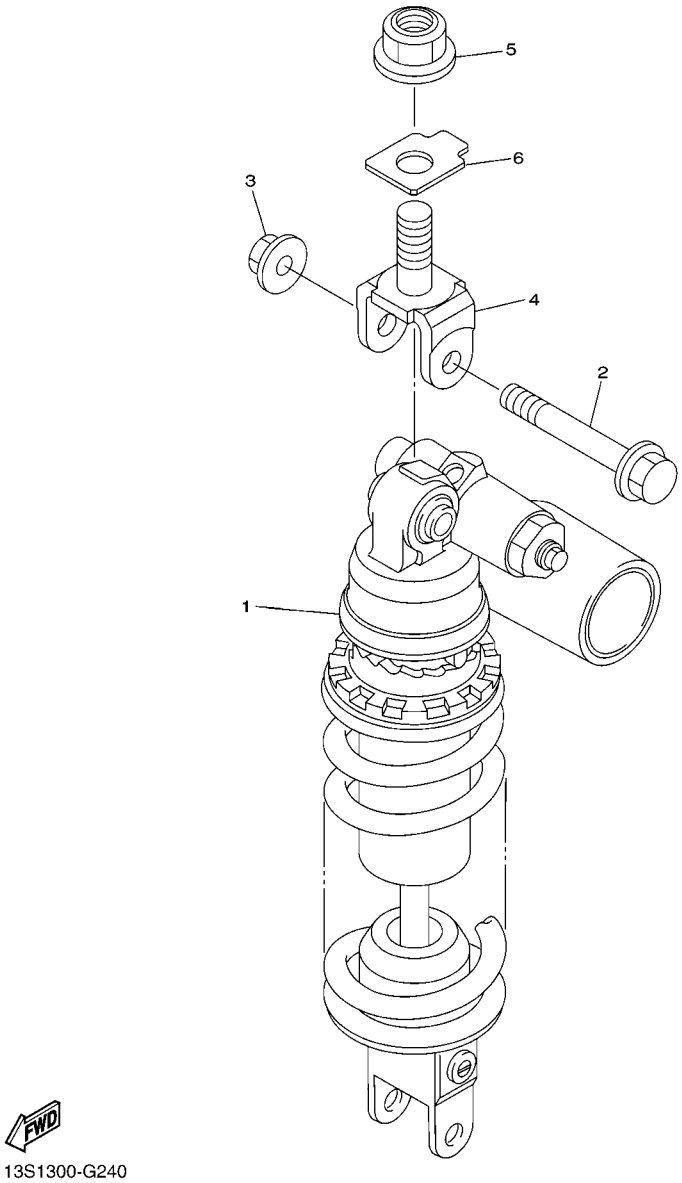

13S1300-G240

FIG. 24 REAR SUSPENSION

REF. NO.	PART NO.	DESCRIPTION	13SL	13SN				REMARKS
1	13S–22210–92	SHOCK ABSORBER ASSY, REAR	1	1				UR FOR DPBMC,SMX
	13S–22210–12	SHOCK ABSORBER ASSY, REAR	1	1				UR FOR BWC1
2	90105–10017	BOLT, FLANGE	1	1				
3	95602–10200	NUT, U FLANGE	1	1				
4	13S–22219–00	BRACKET, UPPER	1	1				
5	95602–14200	NUT, SELF-LOCKING	1	1				
6	13S–22243–00	WASHER 1	1	1				

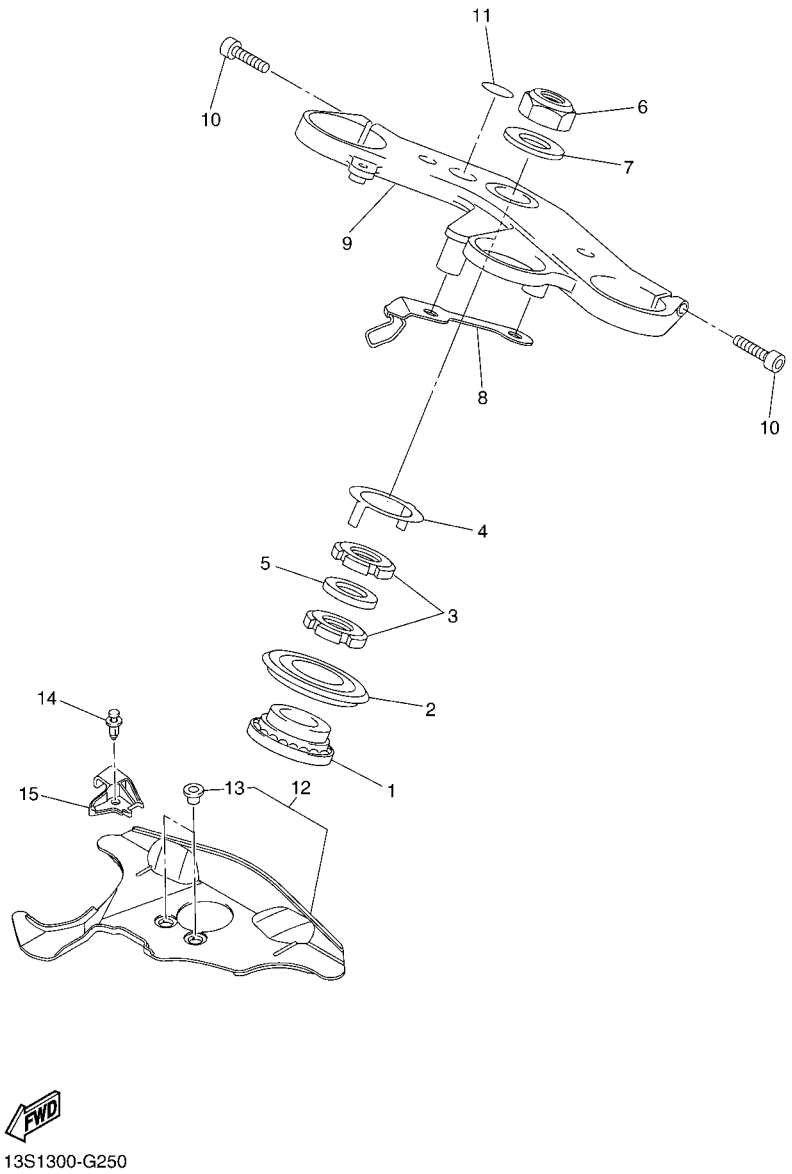

13S1300-G250

FIG. 25 STEERING

REF. NO.	PART NO.	DESCRIPTION	13SL	13SN				REMARKS
1	93399–99932	BEARING	1	1				
2	4XV–23415–01	COVER, BALL RACE 1	1	1				
3	90179–30691	NUT	2	2				
4	4XV–23418–00	WASHER, SPECIAL	1	1				
5	90202–30235	WASHER, PLATE	1	1				
6	90170–28419	NUT	1	1				
7	90201–281U8	WASHER, PLATE	1	1				
8	2C0–23389–00	GUIDE, CABLE	1	1				
9	13S–23435–00	CROWN, HANDLE	1	1				
10	91314–08030	BOLT, HEXAGON SOCKET HEAD	2	2				
11	4XV–2341B–00	EMBLEM	1	1				
12	13S–23808–00	STRG, COVER. ASSY	1	1				
13	90387–06048	.COLLAR	2	2				
14	90269–07001	RIVET	1	1				
15	13S–26279–00	GUIDE, CABLE	1	1				

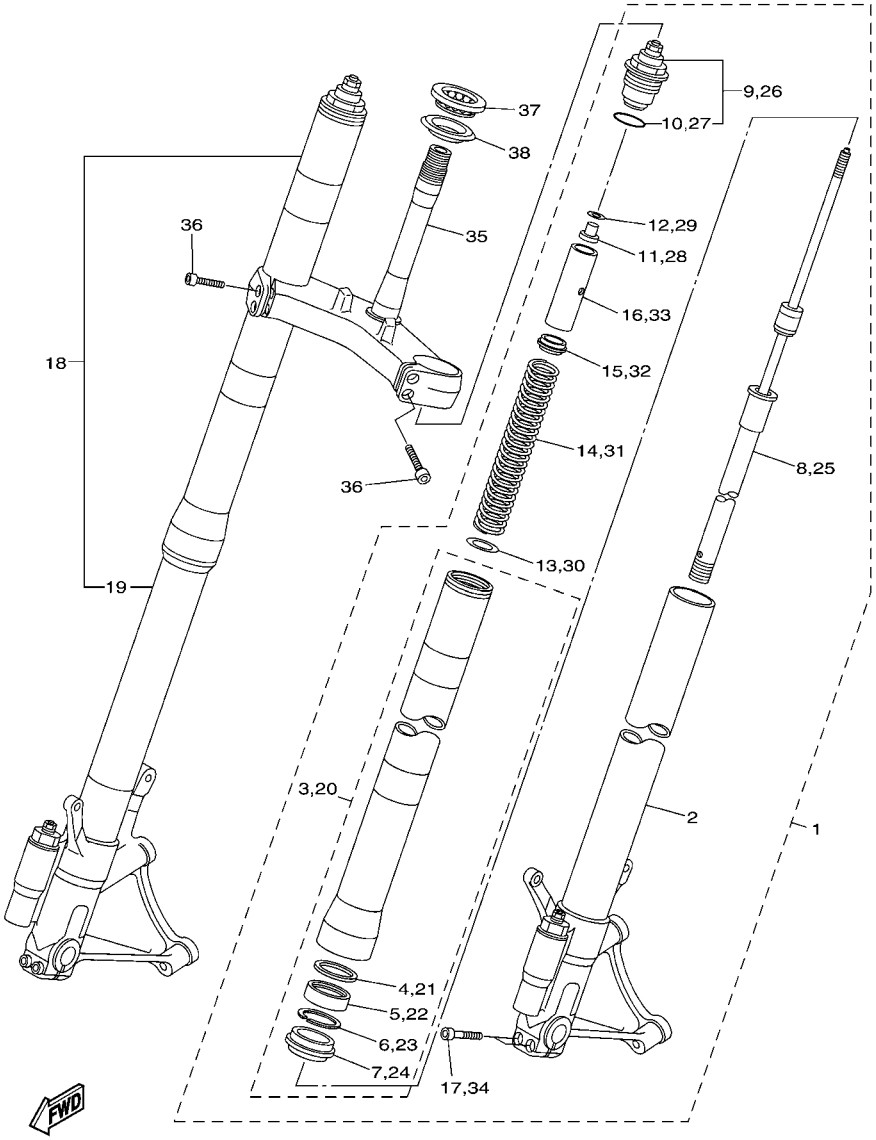

13S1300-G260

FIG. 26 FRONT FORK

REF. NO.	PART NO.	DESCRIPTION	13SL	13SN				REMARKS
1	13S–23102–02	FRONT FORK ASSY (L.H)	1	1				UR FOR DPBMC,SMX
	13S–23102–12	FRONT FORK ASSY (L.H)	1	1				UR FOR BWC1
2	13S–23110–02	.INNER TUBE COMP.1	1	1				
3	13S–23106–00	.OUTER TUBE COMP.	1	1				UR FOR DPBMC,SMX
	13S–23106–10	.OUTER TUBE COMP.	1	1				UR FOR BWC1
4	3VD–23115–00	..GUIDE, COVER UPPER	1	1				
5	5VU–23145–00	..OIL SEAL	1	1				
6	3VD–23156–00	..RING, SNAP	1	1				
7	3VD–23144–00	..SEAL, DUST	1	1				
8	13S–23170–00	.CYLINDER COMP., FRONT FORK	1	1				
9	13S–23111–00	.BOLT, CAP	1	1				
10	93210–41N50	..O-RING	1	1				
11	13S–23393–00	.NUT, SPECIAL	1	1				
12	13S–2332N–00	.PLATE, VALVE 2	1	1				
13	2C0–23143–00	.SEAT, SPRING LOWER	1	1				
14	13S–23141–00	.SPRING, FRONT FORK	1	1				
15	13S–23142–00	.SEAT, SPRING UPPER	1	1				
16	13S–23118–00	.SPACER	1	1				
17	91314–08040	.BOLT, HEXAGON SOCKET HEAD	2	2				
18	13S–23103–02	FRONT FORK ASSY (R.H)	1	1				UR FOR DPBMC,SMX
	13S–23103–12	FRONT FORK ASSY (R.H)	1	1				UR FOR BWC1
19	13S–23120–02	.INNER TUBE COMP.2	1	1				
20	13S–23106–00	.OUTER TUBE COMP.	1	1				UR FOR DPBMC,SMX
	13S–23106–10	.OUTER TUBE COMP.	1	1				UR FOR BWC1
21	3VD–23115–00	..GUIDE, COVER UPPER	1	1				
22	5VU–23145–00	..OIL SEAL	1	1				
23	3VD–23156–00	..RING, SNAP	1	1				

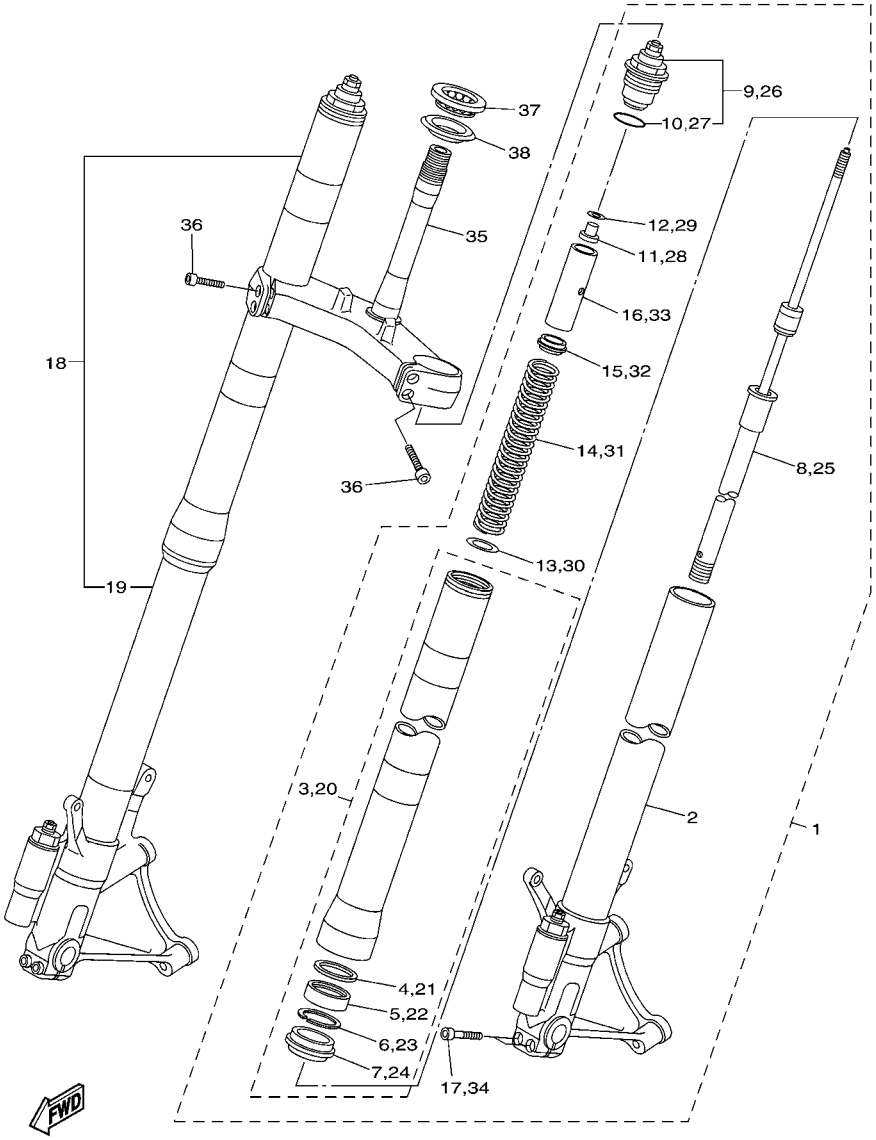

13S1300-G260

FIG. 26 FRONT FORK

REF. NO.	PART NO.	DESCRIPTION	13SL	13SN				REMARKS
24	3VD–23144–00	..SEAL, DUST	1	1				
25	13S–23170–00	.CYLINDER COMP., FRONT FORK	1	1				
26	13S–23111–00	.BOLT, CAP	1	1				
27	93210–41N50	..O-RING	1	1				
28	13S–23393–00	.NUT, SPECIAL	1	1				
29	13S–2332N–00	.PLATE, VALVE 2	1	1				
30	2C0–23143–00	.SEAT, SPRING LOWER	1	1				
31	13S–23141–00	.SPRING, FRONT FORK	1	1				
32	13S–23142–00	.SEAT, SPRING UPPER	1	1				
33	13S–23118–00	.SPACER	1	1				
34	91314–08040	.BOLT, HEXAGON SOCKET HEAD	2	2				
35	13S–23340–00	UNDER BRACKET COMP.	1	1				
36	91314–08030	BOLT, HEXAGON SOCKET HEAD	4	4				
37	93399–99957	BEARING	1	1				
38	3FV–23462–00	SEAL, STEERING	1	1				

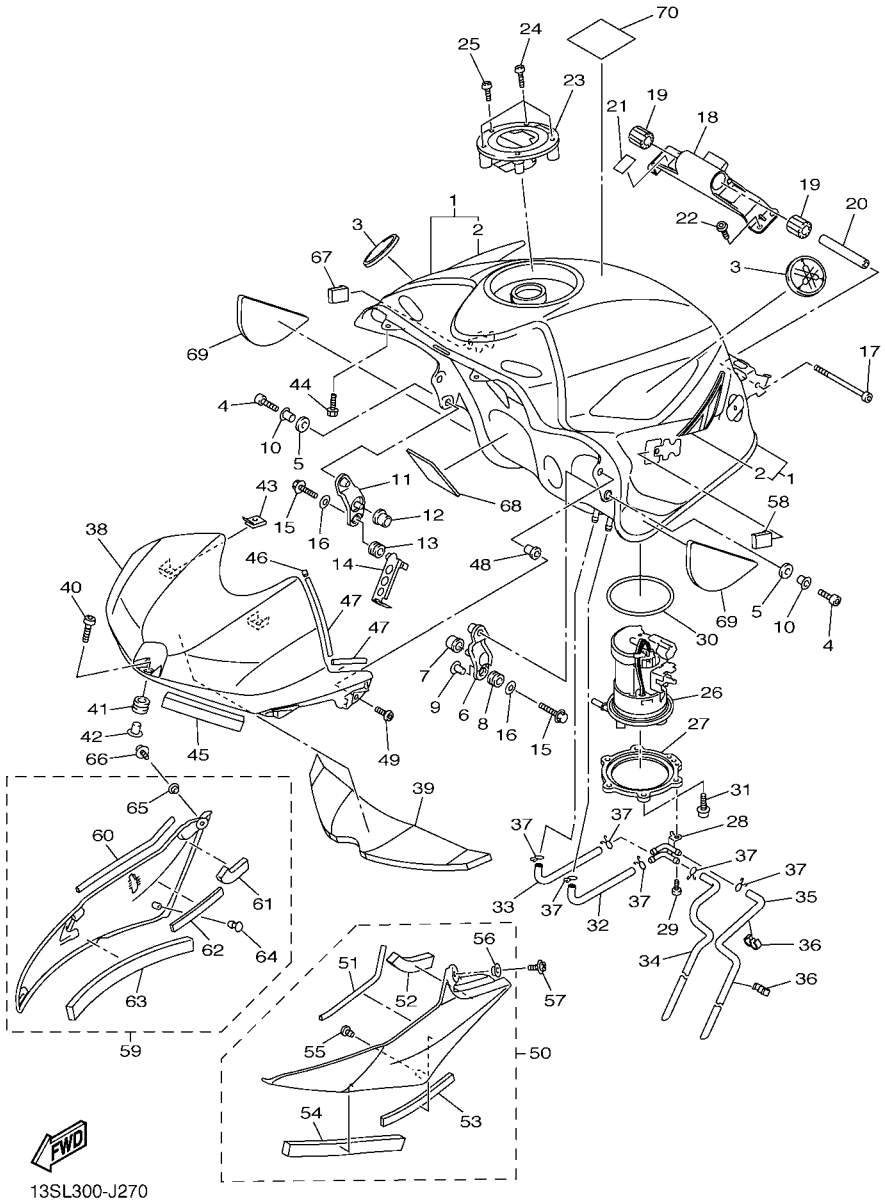

FIG. 27 FUEL TANK

REF. NO.	PART NO.	DESCRIPTION	13SL	13SN				REMARKS
1	13S–Y2410–00–01	FUEL TANK COMP.	1	1				UR FOR DPBMC
	13S–YK241–00–P1	FUEL TANK COMP.	1	1				UR FOR BWC1
	13S–YK241–00–P3	FUEL TANK COMP.	1	1				UR FOR SMX
2	13S–24240–00	.GRAPHIC SET	1	1				FOR DPBMC
3	5SL–2413B–00	EMBLEM	2	2				
4	91312–06016	BOLT	2	2				
5	5VY–24183–00	DAMPER, LOCATING 3	2	2				
6	5VY–24191–00	BRACKET, FUEL TANK 1	1	1				
7	5VY–24181–00	DAMPER, LOCATING 1	1	1				
8	90480–10542	GROMMET	1	1				
9	90387–066Y6	COLLAR	1	1				
10	90387–06143	COLLAR	2	2				
11	5VY–24192–00	BRACKET, FUEL TANK 2	1	1				
12	5VY–24181–00	DAMPER, LOCATING 1	1	1				
13	90480–10542	GROMMET	1	1				
14	2C0–21339–00	GUIDE, WIRE	1	1				
15	95022–06030	BOLT, FLANGE	2	2				
16	90201–06063	WASHER, PLATE	2	2				
17	91312–06090	BOLT	1	1				
18	2C0–2413Y–00	BRACKET, TANK FITTING	1	1				
19	5SL–24183–00	DAMPER, LOCATING 3	2	2				
20	90387–06055	COLLAR	1	1				
21	2C0–21566–00	TAPE, 1	2	2				
22	90111–06071	BOLT,HEX. SOCKET BUTTON	4	4				
23	5JJ–24602–00	CAP ASSY	1	1				
24	90110–05112	BOLT, HEXAGON SOCKET HEAD	3	3				
25	91312–05010	BOLT	1	1				

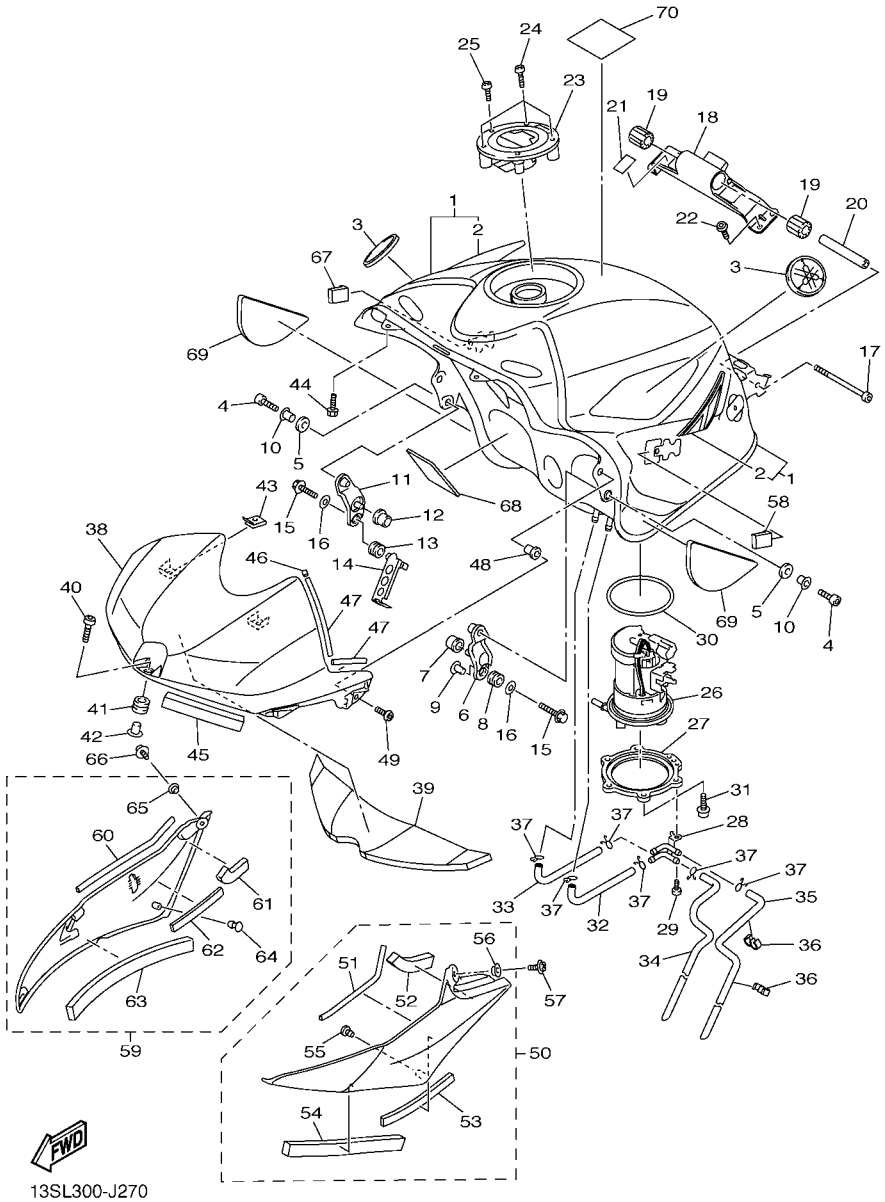

FIG. 27 FUEL TANK

REF. NO.	PART NO.	DESCRIPTION	13SL	13SN				REMARKS
26	4C8–13907–01	FUEL PUMP COMP.	1	1				
27	13S–24491–00	BRACKET, FUEL PUMP	1	1				
28	13S–24135–00	CLAMP 1	1	1				
29	90154–05012	SCREW, BINDING	1	1				
30	5JW–24486–00	O-RING	1	1				
31	90110–05028	BOLT, HEXAGON SOCKET HEAD	6	6				
32	13S–24315–00	PIPE 5	1	1				
33	13S–24316–00	PIPE 6	1	1				
34	13S–24317–00	PIPE 7	1	1				
35	13S–24313–00	PIPE 3	1	1				
36	90464–09M31	CLAMP	2	2				
37	90467–09006	CLIP	6	6				
38	13S–2171A–00–P0	COVER, TOP	1	1				UR FOR DPBMC
	13S–2171A–00–P1	COVER, TOP	1	1				UR FOR BWC1
	13S–2171A–00–P2	COVER, TOP	1	1				UR MBL2 FOR SMX
39	13S–24854–00	DAMPER	1	1				
40	90110–06233	BOLT, HEXAGON SOCKET HEAD	1	1				
41	90480–12023	GROMMET	1	1				
42	90387–06203	COLLAR	1	1				
43	90183–05074	NUT, SPRING	2	2				
44	90105–05014	BOLT, FLANGE	2	2				
45	2C0–2414J–00	DAMPER, PLATE 2	2	2				
46	13S–24181–00	DAMPER, LOCATING 1	2	2				
47	2C0–2414N–00	DAMPER, PLATE 4	4	4				
48	90179–05523	NUT	2	2				
49	98902–05014	SCREW, BIND	2	2				
50	13S–24106–00	TANK SIDE COVER ASSY 1	1	1				

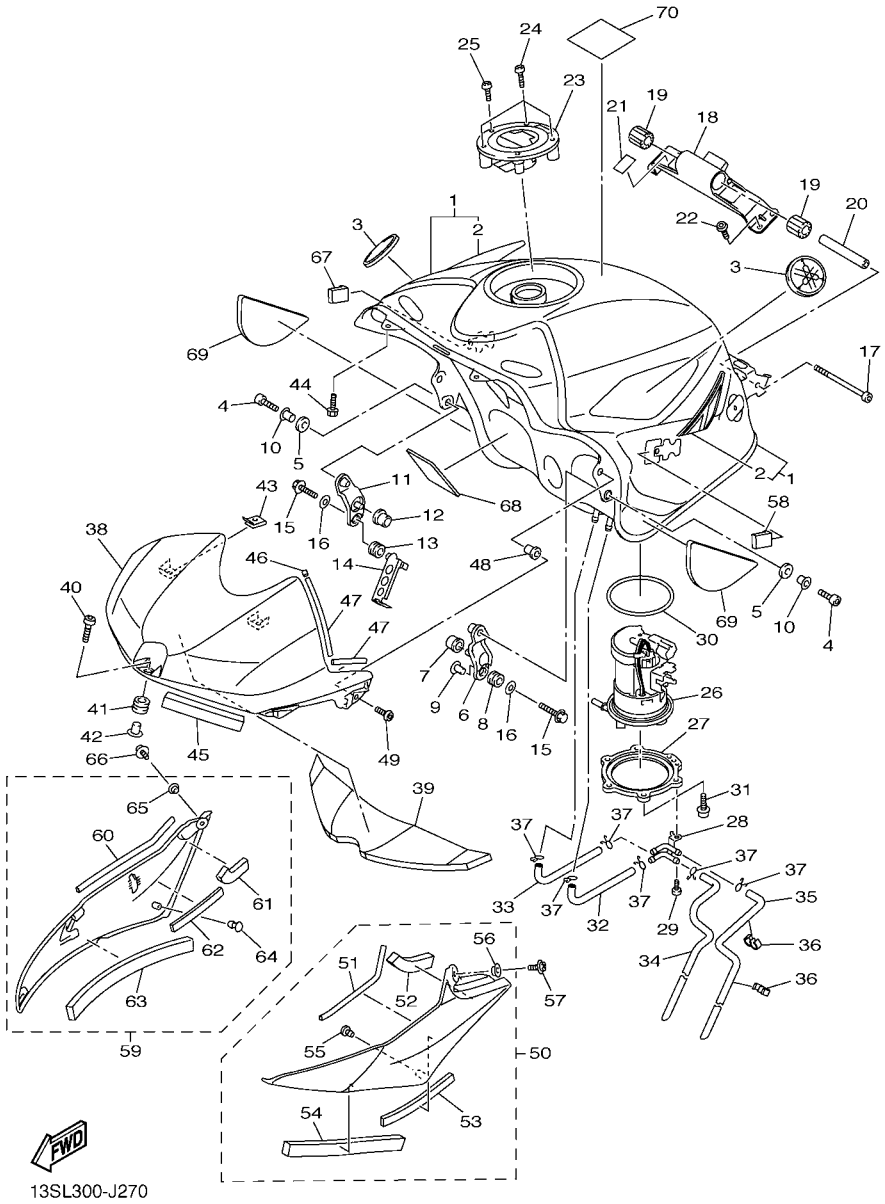

FIG. 27 FUEL TANK

REF. NO.	PART NO.	DESCRIPTION	13SL	13SN				REMARKS
51	4C8–2414H–00	.DAMPER, PLATE 1	1	1				
52	2C0–2414P–00	.DAMPER, PLATE 5	1	1				
53	4C8–2414J–00	.DAMPER, PLATE 2	1	1				
54	2C0–24184–00	.DAMPER, LOCATING 4	1	1				
55	90338–06018	.PLUG	1	1				
56	90387–05035	.COLLAR	1	1				
57	98902–05008	SCREW, BIND	1	1				
58	5PW–2411J–01	DAMPER, SIDE COVER	1	1				
59	13S–24108–00	TANK SIDE COVER ASSY 2	1	1				
60	4C8–2414H–00	.DAMPER, PLATE 1	1	1				
61	2C0–2414P–00	.DAMPER, PLATE 5	1	1				
62	4C8–2414J–00	.DAMPER, PLATE 2	1	1				
63	2C0–24184–00	.DAMPER, LOCATING 4	1	1				
64	90338–06018	.PLUG	1	1				
65	90387–05035	.COLLAR	1	1				
66	98902–05008	SCREW, BIND	1	1				
67	5PW–2411J–01	DAMPER, SIDE COVER	1	1				
68	13S–24145–00	DAMPER, SIDE COVER	1	1				
69	2C0–24145–00	DAMPER, SIDE COVER	2	2				
70	4C8–21568–01	LABEL, WARNING	1	1				

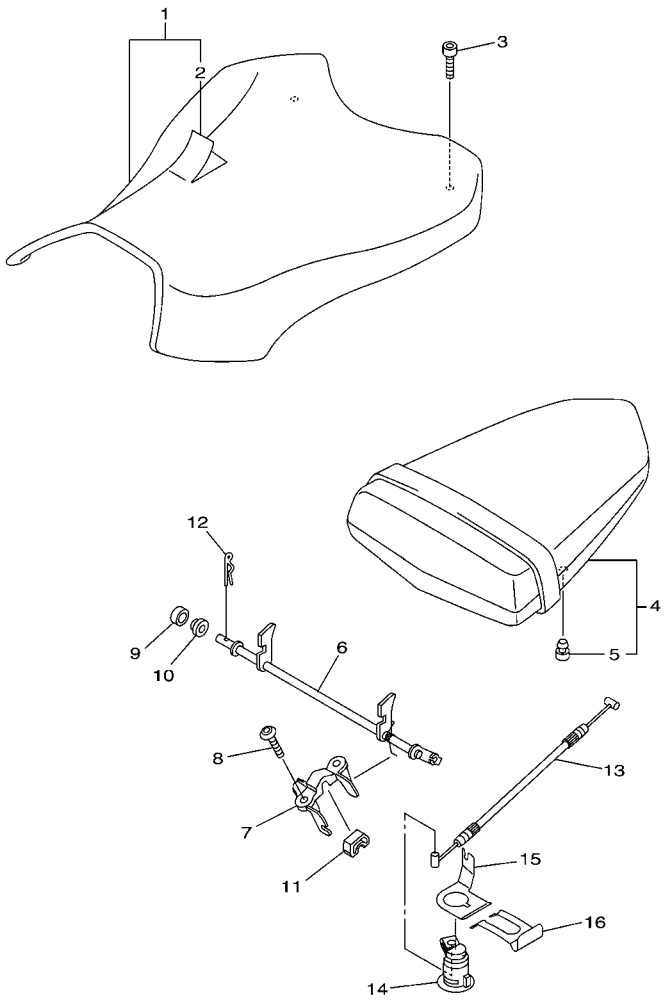

13S1300-G280

FIG. 28 SEAT

REF. NO.	PART NO.	DESCRIPTION	13SL	13SN				REMARKS
1	13S–24710–00	SINGLE SEAT ASSY	1	1				
2	13S–24711–00	.COVER, SINGLE SEAT	1	1				
3	90110–06258	BOLT, HEXAGON SOCKET HEAD	2	2				
4	13S–24750–00	TANDEM SEAT ASSY	1	1				
5	5SL–24723–00	.DAMPER, SEAT	2	2				
6	2C0–24780–00	SEAT LOCK ASSY	1	1				
7	2C0–24792–00	PLATE	1	1				
8	90111–06051	BOLT,HEX. SOCKET BUTTON	2	2				
9	2C0–24825–00	SPACER, CARRIER	1	1				
10	13S–24725–00	SPACER 1	1	1				
11	13S–24847–00	HOLDER 1	1	1				
12	90468–16001	CLIP	1	1				
13	13S–2478E–00	CABLE, SEAT LOCK	1	1				
14	5VY–W2470–00	ROTOR SET	1	1				
15	5VY–2117K–01	STAY, LOCK	1	1				
16	5VY–2176V–00	SPRING, LOCK 2	1	1				

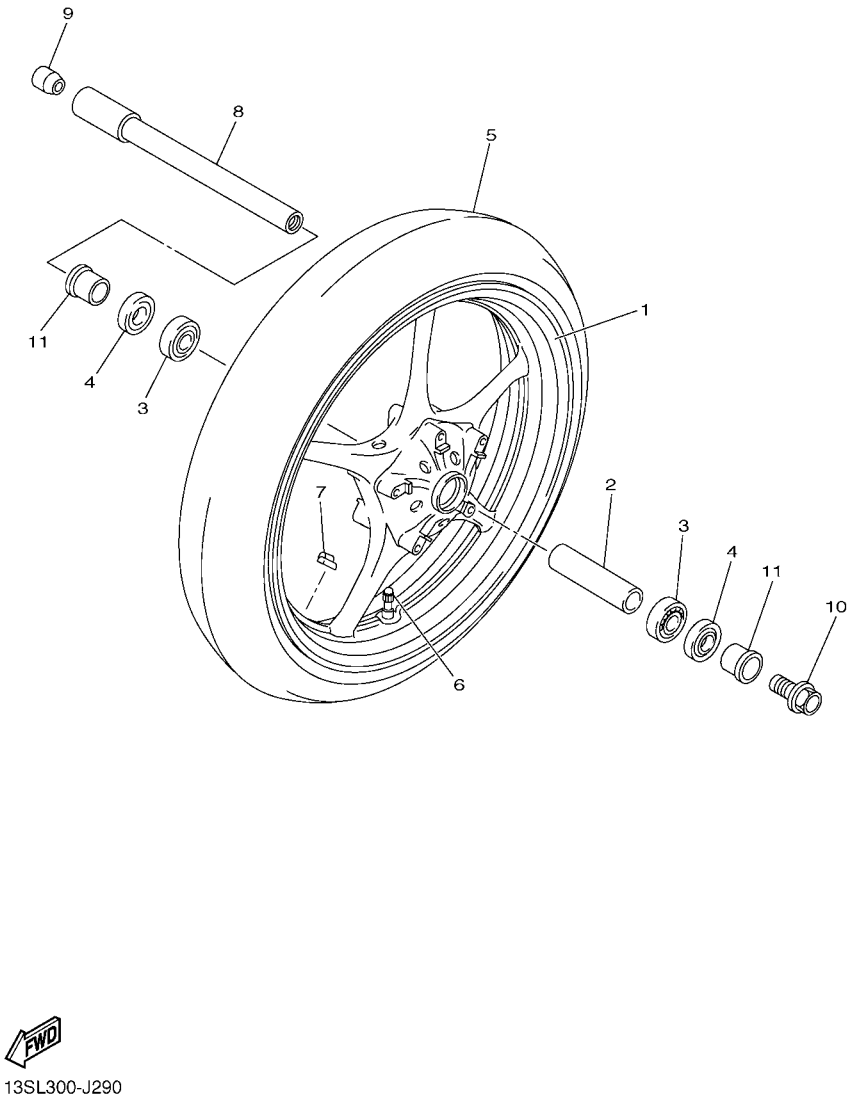

13SL300-J290

FIG. 29 FRONT WHEEL

REF. NO.	PART NO.	DESCRIPTION	13SL	13SN				REMARKS
1	5SL–25168–00–0X	CAST WHEEL, FRONT	1	1				LGB FOR BWC1
	5SL–25168–00–8L	CAST WHEEL, FRONT	1	1				NG FOR DPBMC,SMX
2	4XV–25117–00	SPACER, BEARING	1	1				
3	93306–07208	BEARING	2	2				
4	93106–28043	OIL SEAL	2	2				
5	94112–17099	TIRE(120/70 ZR17M/C 58W)	1	1				UR DUNLOP
	94112–17100	TIRE(120/70ZR17M/C 58W BT016F)	1					UR BRIDGESTONE
6	93900–00030	VALVE, RIM (TR412)	1	1				TAIHEIYO
7	5MT–25398–00	BALANCER, WHEEL (10G)	1	1				UR
	5MT–25398–10	BALANCER, WHEEL (20G)	1	1				UR
	5MT–25398–20	BALANCER, WHEEL (30G)	1	1				UR
8	2C0–25181–00	AXLE, WHEEL	1	1				
9	5PW–25188–00	CAP	1	1				
10	90105–14002	BOLT, FLANGE	1	1				
11	90387–22016	COLLAR	2	2				

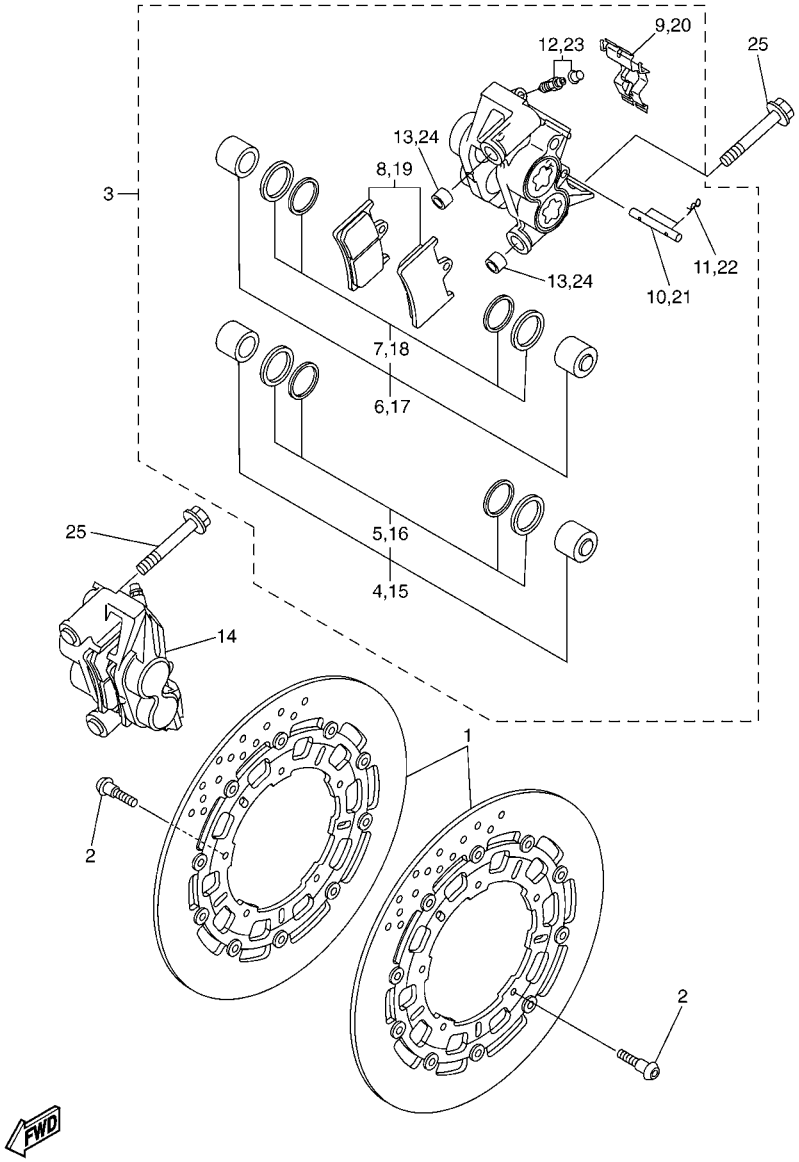

13S1300-G301

FIG. 30 FRONT BRAKE CALIPER

REF. NO.	PART NO.	DESCRIPTION	13SL	13SN				REMARKS
1	13S–2581T–00	DISK BRAKE ASSY	2	2				
2	90149–06043	SCREW	10	10				
3	13S–2580T–00	CALIPER ASSY (LEFT)	1	1				UR FOR DPBMC,SMX
	13S–2580T–10	CALIPER ASSY (LEFT)	1	1				UR FOR BWC1
4	5PW–W0057–10	.PISTON ASSY, CALIPER	1	1				
5	5PW–W0047–10	..CALIPER SEAL KIT	1	1				
6	5PW–W0057–00	.PISTON ASSY, CALIPER	1	1				
7	5PW–W0047–00	..CALIPER SEAL KIT	1	1				
8	2C0–W0045–00	.BRAKE PAD KIT	1	1				
9	13S–25919–00	.SUPPORT, PAD	1	1				
10	4SV–25924–00	.PIN, PAD	1	1				
11	3GM–25925–00	.CLIP	2	2				
12	1J3–W0048–00	.BLEED SCREW KIT	1	1				
13	5VY–2583B–00	.PIN, KNOCK	2	2				
14	13S–2580U–00	CALIPER ASSY (RIGHT)	1	1				UR FOR DPBMC,SMX
	13S–2580U–10	CALIPER ASSY (RIGHT)	1	1				UR FOR BWC1
15	5PW–W0057–10	.PISTON ASSY, CALIPER	1	1				
16	5PW–W0047–10	..CALIPER SEAL KIT	1	1				
17	5PW–W0057–00	.PISTON ASSY, CALIPER	1	1				
18	5PW–W0047–00	..CALIPER SEAL KIT	1	1				
19	2C0–W0045–00	.BRAKE PAD KIT	1	1				
20	13S–25919–00	.SUPPORT, PAD	1	1				
21	4SV–25924–00	.PIN, PAD	1	1				
22	3GM–25925–00	.CLIP	2	2				
23	1J3–W0048–00	.BLEED SCREW KIT	1	1				
24	5VY–2583B–00	.PIN, KNOCK	2	2				
25	90401–10012	BOLT, UNION	4	4				

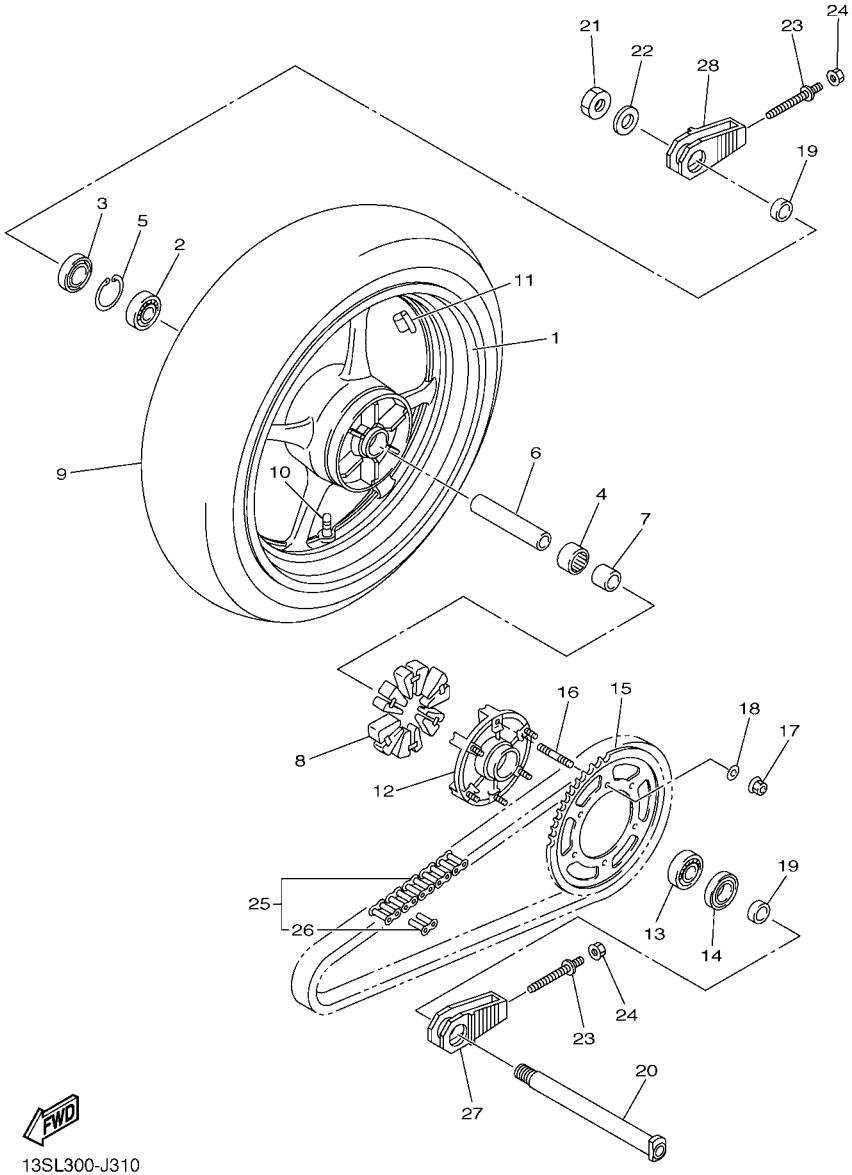

FIG. 31 REAR WHEEL

REF. NO.	PART NO.	DESCRIPTION	13SL	13SN				REMARKS
1	5SL–25338–00–0X	CAST WHEEL, REAR	1	1				LGB FOR BWC1
	5SL–25338–00–8L	CAST WHEEL, REAR	1	1				NG FOR DPBMC,SMX
2	93306–20531	BEARING	1	1				
3	93106–40013	OIL SEAL	1	1				
4	93317–43580	BEARING	1	1				
5	93420–61M07	CIRCLIP	1	1				
6	4XV–25317–00	SPACER, BEARING	1	1				
7	5SL–25383–00	COLLAR, WHEEL	1	1				
8	2C0–25364–00	DAMPER	6	6				
9	94118–17067	TIRE(180/55 ZR17 M/C 73W)	1	1				UR DUNLOP
	94118–17068	TIRE(180/55 ZR17M/C73W BT016R)	1					UR BRIDGESTONE
10	93900–00030	VALVE, RIM (TR412)	1	1				TAIHEIYO
11	5MT–25398–00	BALANCER, WHEEL (10G)	1	1				UR
	5MT–25398–10	BALANCER, WHEEL (20G)	1	1				UR
	5MT–25398–20	BALANCER, WHEEL (30G)	1	1				UR
12	5SL–25366–00	CLUTCH, HUB	1	1				
13	93306–20531	BEARING	1	1				
14	93106–40013	OIL SEAL	1	1				
15	2C0–25445–20	SPROCKET, DRIVEN (45T)	1	1				
16	90116–10485	BOLT, STUD	6	6				
17	90185–10009	NUT, SELF-LOCKING	6	6				
18	90201–10021	WASHER, PLATE	6	6				
19	13S–25376–00	COLLAR, WHEEL	2	2				
20	2C0–25381–10	AXLE, WHEEL	1	1				
21	90185–24007	NUT, SELF-LOCKING	1	1				
22	90201–25020	WASHER, PLATE	1	1				
23	2C0–25379–00	BOLT, CHAIN PULLAR	2	2				

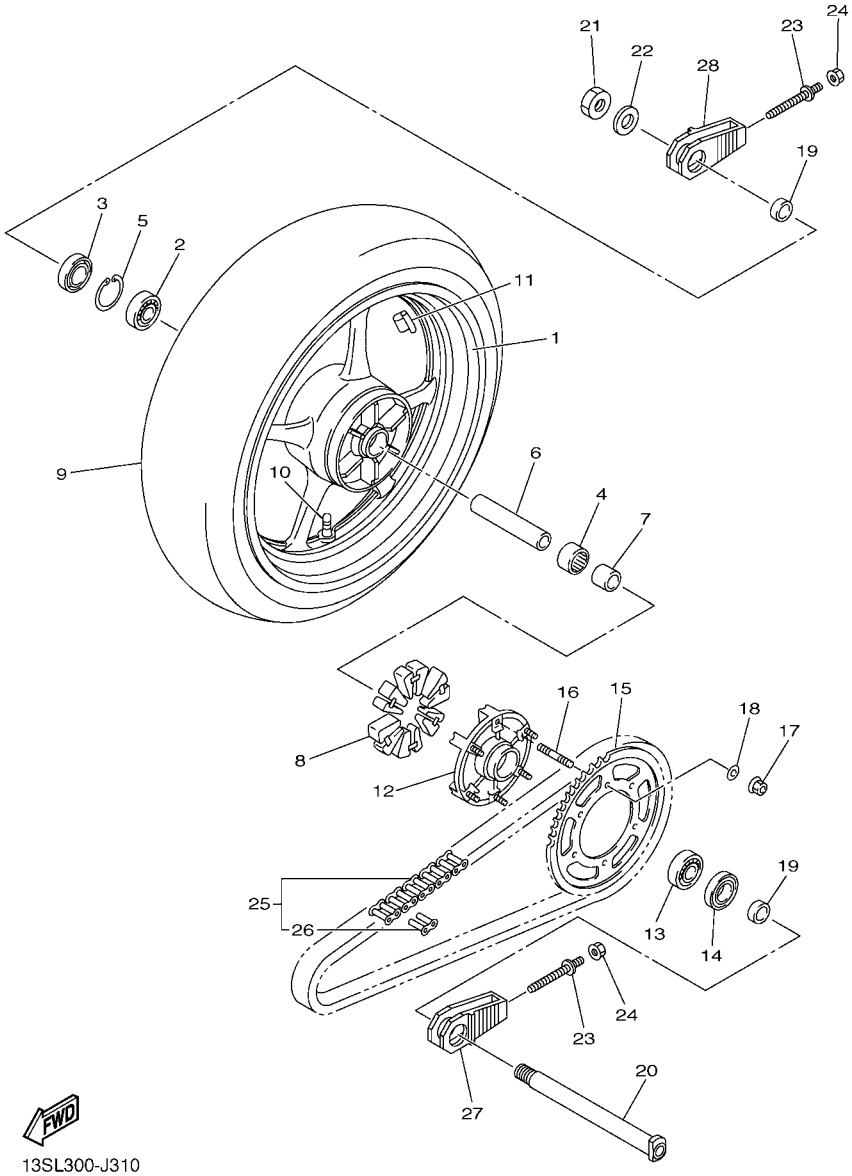

FIG. 31 REAR WHEEL

REF. NO.	PART NO.	DESCRIPTION	13SL	13SN				REMARKS
24	95604–08200	NUT, U FLANGE	2	2				
25	94582–21114	CHAIN (DID525V8-114)	1	1				
26	94682–21031	.JOINT, CHAIN	1	1				
27	2C0–25388–00	PULLER, CHAIN 1	1	1				
28	2C0–25389–00	PULLER, CHAIN 2	1	1				

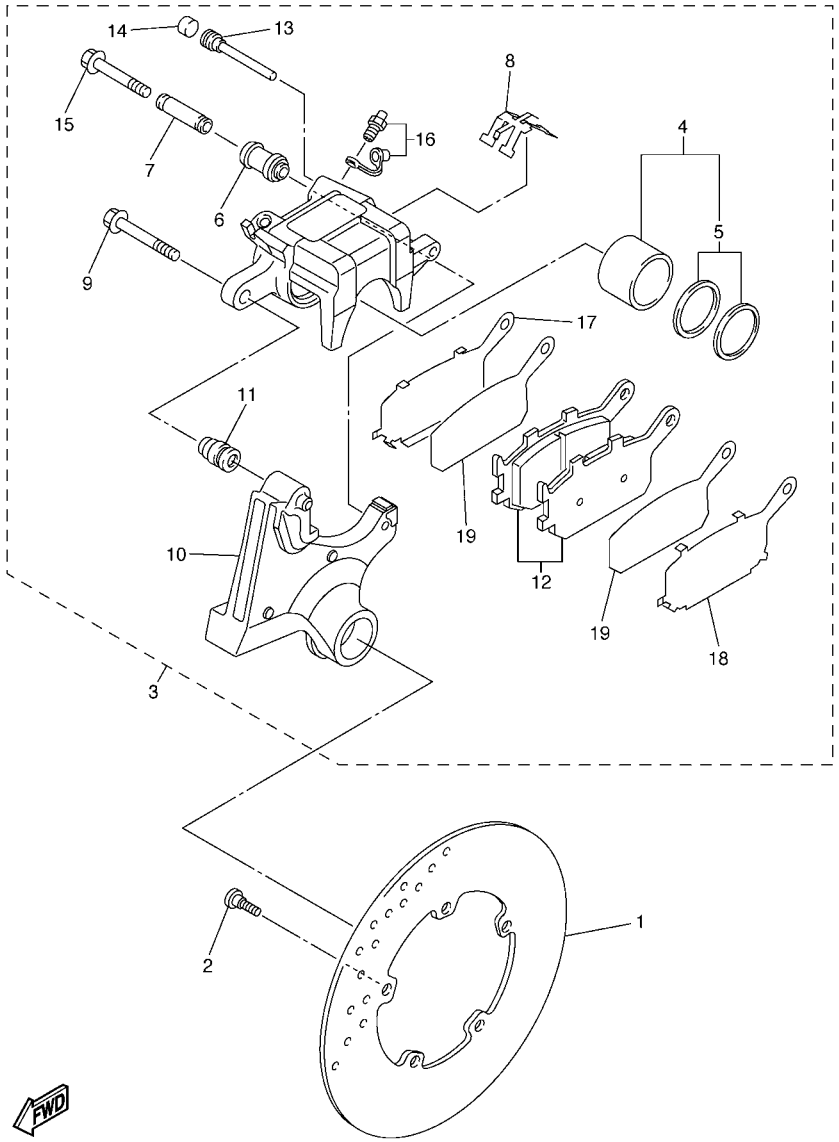

2C01300-E321

FIG. 32 REAR BRAKE CALIPER

REF. NO.	PART NO.	DESCRIPTION	13SL	13SN				REMARKS
1	5SL–2582W–00	DISK, REAR BRAKE 2	1	1				
2	90149–08009	SCREW	5	5				
3	2C0–2580W–00	CALIPER ASSY, REAR 2	1	1				
4	5VY–W0057–00	.PISTON ASSY, CALIPER	1	1				
5	5SL–W0047–00	..CALIPER SEAL KIT	1	1				
6	5SL–25917–00	.BOOT, CALIPER	1	1				
7	5SL–25838–00	.SLEEVE, CALIPER	1	1				
8	5SL–25919–00	.SUPPORT, PAD	1	1				
9	5SL–25914–00	.PIN, SLIDE	1	1				
10	2C0–25921–00	.BRACKET, SUPPORT	1	1				
11	3JD–25917–00	.BOOT, CALIPER	1	1				
12	5VX–W0046–00	.BRAKE PAD KIT 2	1	1				
13	8CR–25924–00	.PIN, PAD	1	1				
14	5DH–25916–00	.PLUG	1	1				
15	5SL–25926–00	.BOLT	1	1				
16	1UY–W0048–00	.BLEED SCREW KIT	1	1				
17	5SL–25827–00	.SHIM, CALIPER	1	1				
18	5SL–25827–10	.SHIM, CALIPER	1	1				
19	5SL–25828–00	.SHIM, CALIPER	2	2				

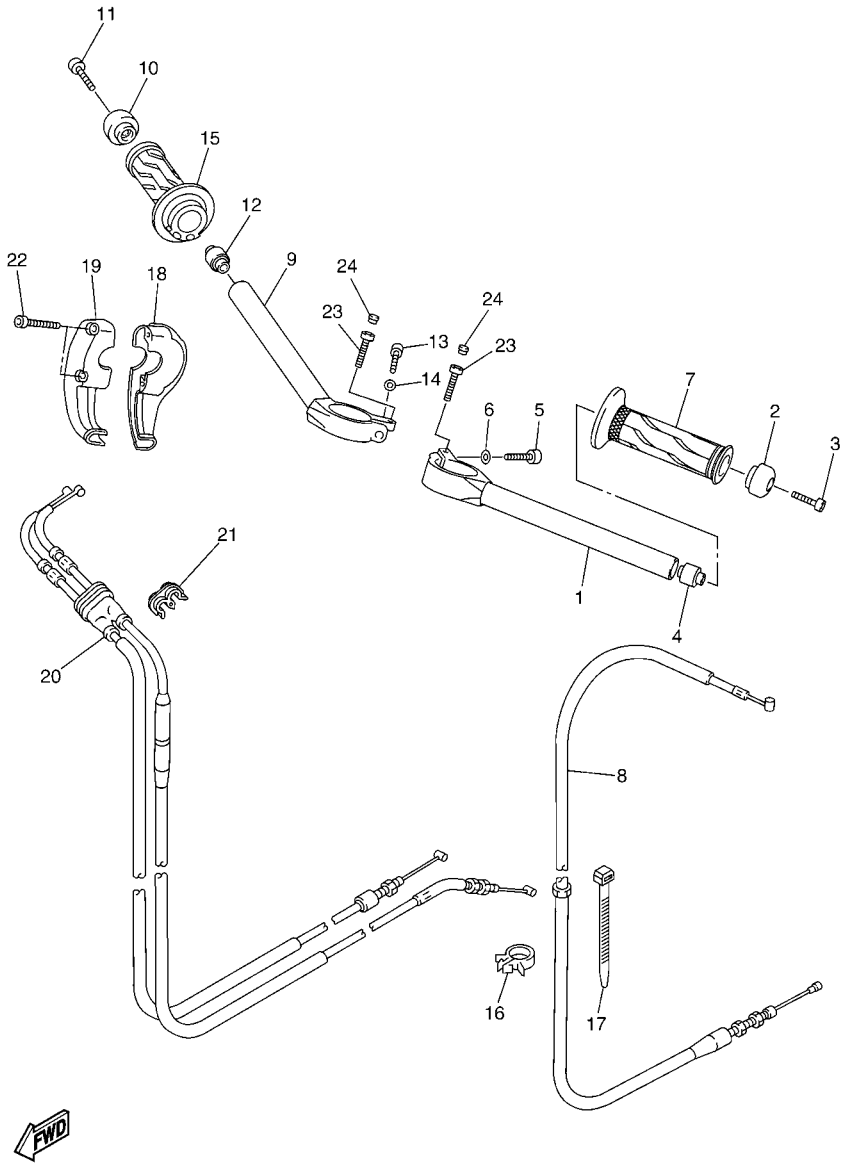

13S1300-G330

FIG. 33 STEERING HANDLE & CABLE

REF. NO.	PART NO.	DESCRIPTION	13SL	13SN				REMARKS
1	13S–26121–00	HANDLEBAR (LEFT)	1	1				
2	4XV–26246–00	END, GRIP	1	1				
3	91312–06025	BOLT	1	1				
4	4XV–23434–00	HOLDER, DAMPER	1	1				
5	91314–08030	BOLT, HEXAGON SOCKET HEAD	1	1				
6	90201–08452	WASHER, PLATE	1	1				
7	2C0–26241–00	GRIP	1	1				
8	2C0–26335–00	CABLE, CLUTCH	1	1				
9	13S–26122–00	HANDLEBAR (RIGHT)	1	1				
10	4XV–26246–00	END, GRIP	1	1				
11	91312–06025	BOLT	1	1				
12	4XV–23434–00	HOLDER, DAMPER	1	1				
13	91314–08030	BOLT, HEXAGON SOCKET HEAD	1	1				
14	90201–08452	WASHER, PLATE	1	1				
15	2C0–26240–00	GRIP ASSY	1	1				
16	90464–15157	CLAMP	1	1				
17	90464–15195	CLAMP	1	1				
18	5VY–26281–00	CAP, GRIP UPPER	1	1				
19	2C0–26282–00	CAP, GRIP UNDER	1	1				
20	13S–26302–00	THROTTLE CABLE ASSY	1	1				
21	90464–04001	CLAMP	1	1				
22	90110–05018	BOLT, HEXAGON SOCKET HEAD	2	2				
23	91312–06030	BOLT	2	2				
24	2H9–23469–00	CAP, BOLT	2	2				

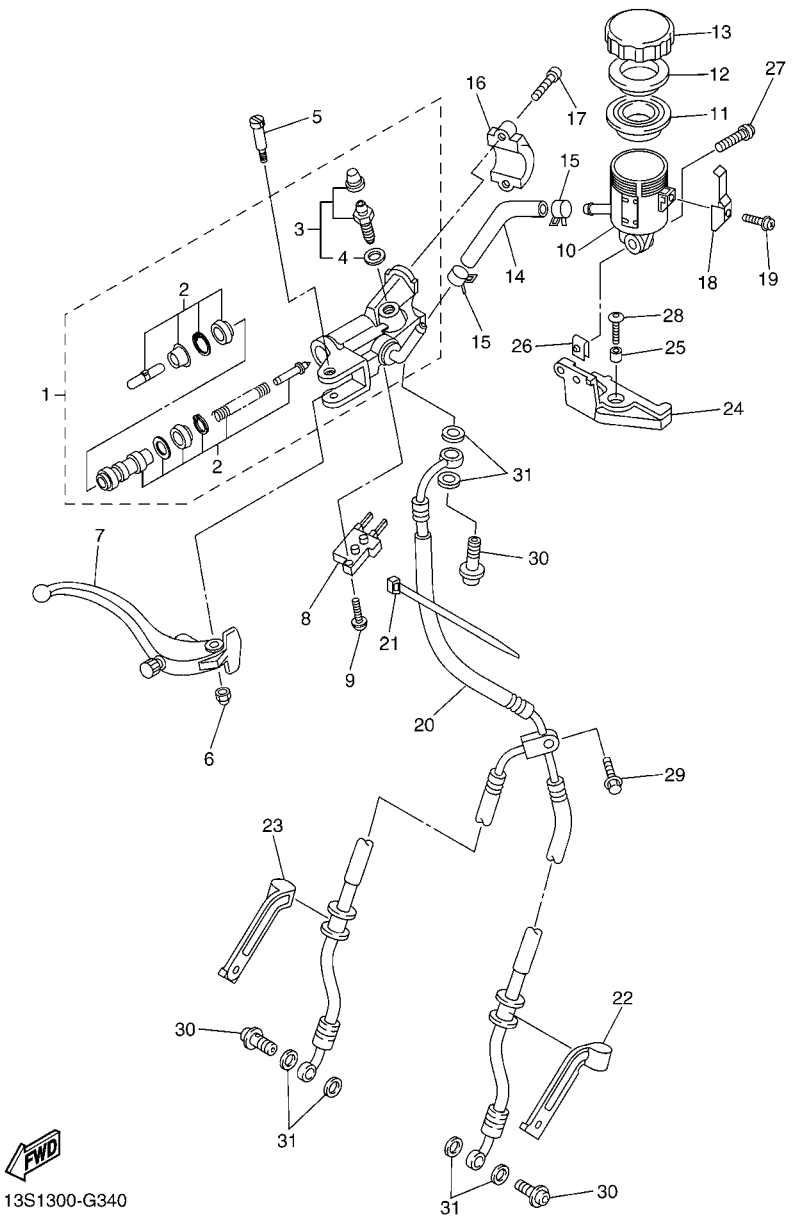

FIG. 34 FRONT MASTER CYLINDER

REF. NO.	PART NO.	DESCRIPTION	13SL	13SN				REMARKS
1	5SL–W2587–00	MASTER CYLINDER SUB ASSY	1	1				
2	5VY–W0041–00	.CYLINDER KIT, MASTER	1	1				
3	5VY–W0048–00	.BLEED SCREW KIT	1	1				
4	5VY–25975–00	..SEAL 1	1	1				
5	5VY–2589F–01	BOLT, LEVER	1	1				
6	5VS–2586F–00	NUT, COVER	1	1				
7	5SL–83922–10	LEVER 2	1	1				
8	4HM–83980–00	FRONT STOP SWITCH ASSY	1	1				
9	5VS–2585H–00	SCREW,SET	1	1				
10	5SL–25894–20	TANK, RESERVOIR	1	1				
11	5VY–25854–00	GASKET, DIAPHRAGM	1	1				
12	5VY–25855–00	BUSH,DIAPHRAGM	1	1				
13	5VY–25852–00	CAP, RESERVOIR	1	1				
14	13S–2589E–00	HOSE	1	1				
15	90467–120A3	CLIP	2	2				
16	5VS–25867–00	BRACKET, MASTER CYLINDER	1	1				
17	5VS–26332–00	BOLT	2	2				
18	5VY–2589G–00	HOLDER	1	1				
19	5VY–2589H–00	SCREW	1	1				
20	13S–25872–00	HOSE, BRAKE 1	1	1				
21	3MA–82591–00	BAND	1	1				
22	2C0–25886–00	HOLDER, BRAKE HOSE	1	1				
23	13S–25887–00	HOLDER, BRAKE HOSE	1	1				
24	13S–26292–00	STAY	1	1				
25	90387–06057	COLLAR	1	1				
26	90183–050A0	NUT, SPRING	1	1				
27	90111–05025	BOLT,HEX. SOCKET BUTTON	1	1				

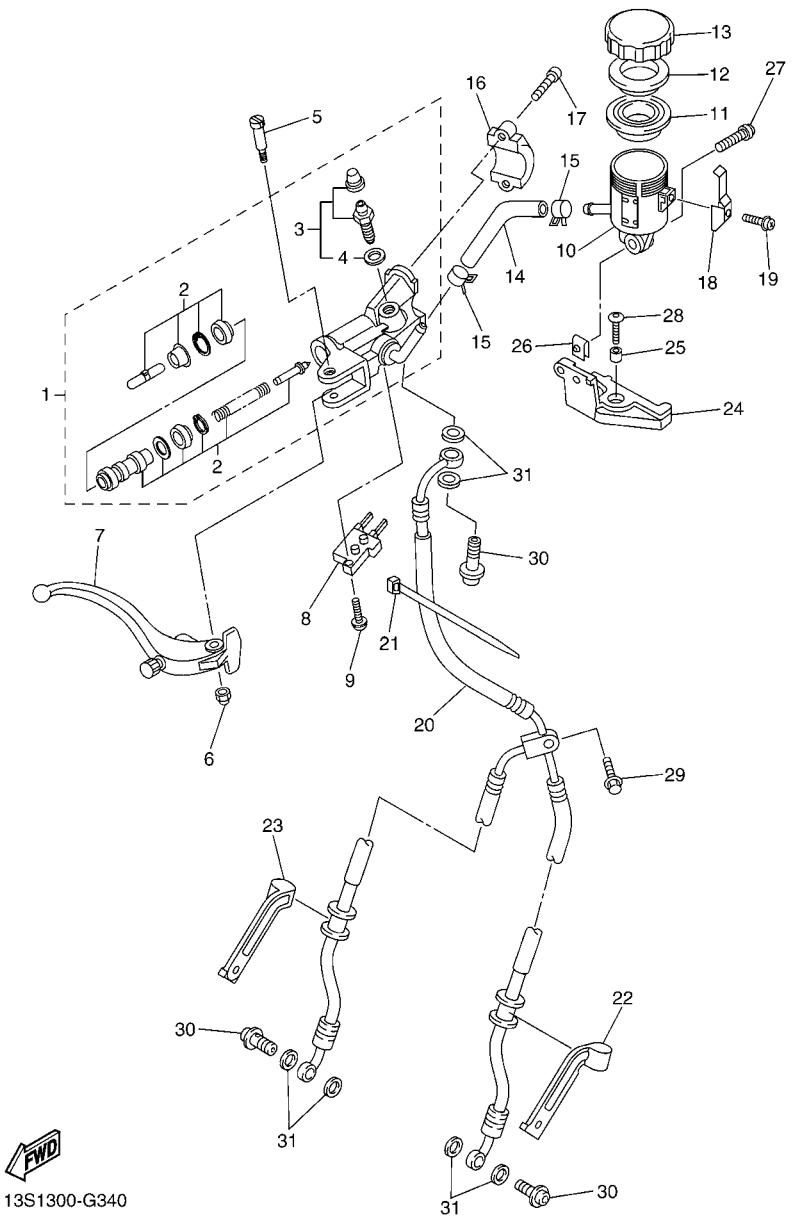

FIG. 34 FRONT MASTER CYLINDER

REF. NO.	PART NO.	DESCRIPTION	13SL	13SN				REMARKS
28	90111–06041	BOLT,HEX. SOCKET BUTTON	1	1				
29	90105–06041	BOLT, FLANGE	1	1				
30	90401–10172	BOLT, UNION	3	3				
31	90430–10005	GASKET	6	6				

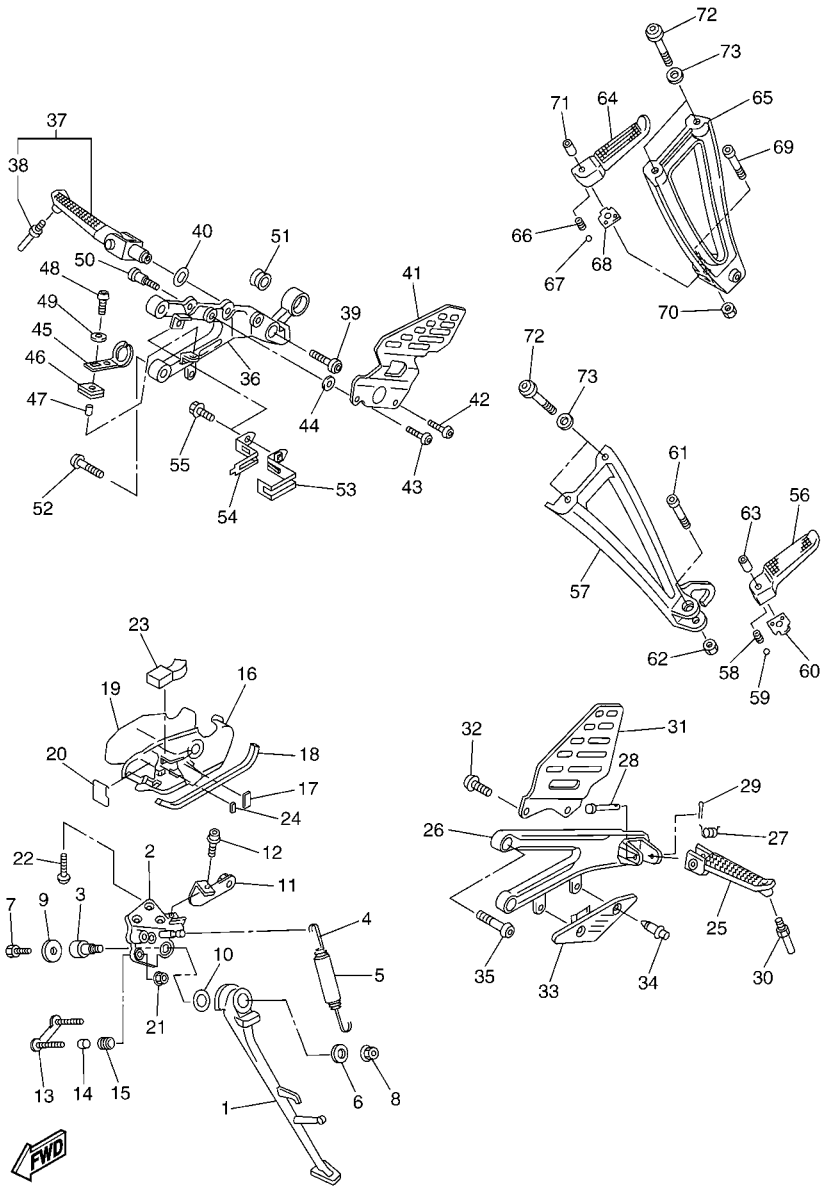

FIG. 35 STAND & FOOTREST

REF. NO.	PART NO.	DESCRIPTION	13SL	13SN				REMARKS
1	2C0–27311–00	STAND, SIDE	1	1				
2	2C0–27321–00	BRACKET, SIDE STAND	1	1				
3	2C0–27351–00	GUIDE, SIDE STAND	1	1				
4	90506–18008	SPRING, TENSION	1	1				
5	90445–19002	HOSE (L60)	1	1				
6	90201–10035	WASHER, PLATE	1	1				
7	90101–08662	BOLT	1	1				
8	95602–10200	NUT, U FLANGE	1	1				
9	90201–08050	WASHER, PLATE	1	1				
10	90201–146F9	WASHER, PLATE	1	1				
11	13S–2836F–00	BRACKET 3	1	1				
12	90105–06020	BOLT, FLANGE	1	1				
13	2C0–27263–00	BRACKET 1	1	1				
14	90387–05025	COLLAR	2	2				
15	90480–11006	GROMMET	2	2				
16	2C0–27453–00	COVER 1	1	1				
17	2C0–27414–00	DAMPER, FOOTREST	1	1				
18	2C0–27415–00	PLATE, FOOTREST	1	1				
19	2C0–28428–00	SEAL 1	1	1				
20	2C0–28429–00	SEAL 2	1	1				
21	90185–05009	NUT, SELF-LOCKING	2	2				
22	90111–08065	BOLT,HEX. SOCKET BUTTON	3	3				
23	2C0–28425–00	DAMPER 3	1	1				
24	2C0–21485–00	DAMPER, RUBBER 1	1	1				
25	2C0–27451–00	FOOTREST	1	1				
26	2C0–27442–00	BRACKET 2	1	1				
27	90508–18134	SPRING, TORSION	1	1				

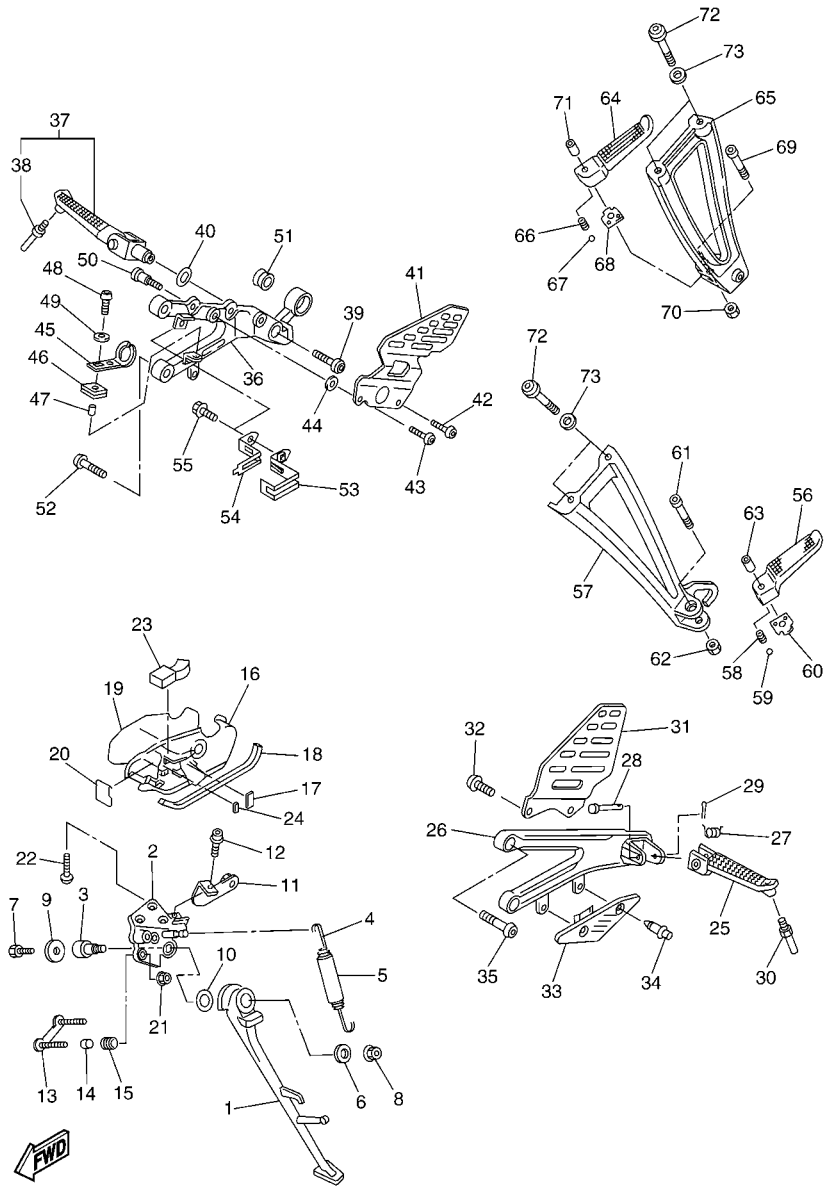

FIG. 35 STAND & FOOTREST

REF. NO.	PART NO.	DESCRIPTION	13SL	13SN				REMARKS
28	90240–08084	PIN, CLEVIS	1	1				
29	91402–25015	PIN, COTTER	1	1				
30	2C0–27435–00	BOLT	1	1				
31	2C0–27445–00	PLATE 1	1	1				
32	90149–06233	SCREW	2	2				
33	2C0–27491–00	PROTECTOR	1	1				
34	90269–06008	RIVET	2	2				
35	90109–085G6	BOLT	2	2				
36	2C0–27443–00	BRACKET 3	1	1				
37	2C0–27420–00	FRONT FOOTREST ASSY (RIGHT)	1	1				
38	2C0–27435–00	.BOLT	1	1				
39	90109–103A9	BOLT	1	1				
40	90214–13002	WASHER, CLAW	1	1				
41	13S–27446–00	PLATE 2	1	1				
42	90149–06233	SCREW	1	1				
43	90111–06067	BOLT,HEX. SOCKET BUTTON	1	1				
44	90387–06215	COLLAR	1	1				
45	13S–2144G–00	STAY, STOP SWITCH	1	1				
46	90480–12607	GROMMET	1	1				
47	90387–06023	COLLAR	1	1				
48	92017–06016	BOLT, BUTTON HEAD	1	1				
49	90201–06380	WASHER, PLATE	1	1				
50	90109–066F0	BOLT	2	2				
51	2C0–14747–00	DAMPER, MUFFLER	1	1				
52	90109–085G6	BOLT	2	2				
53	2C0–2116K–00	BRACKET 8	1	1				
54	2C0–2116L–00	BRACKET 9	1	1				

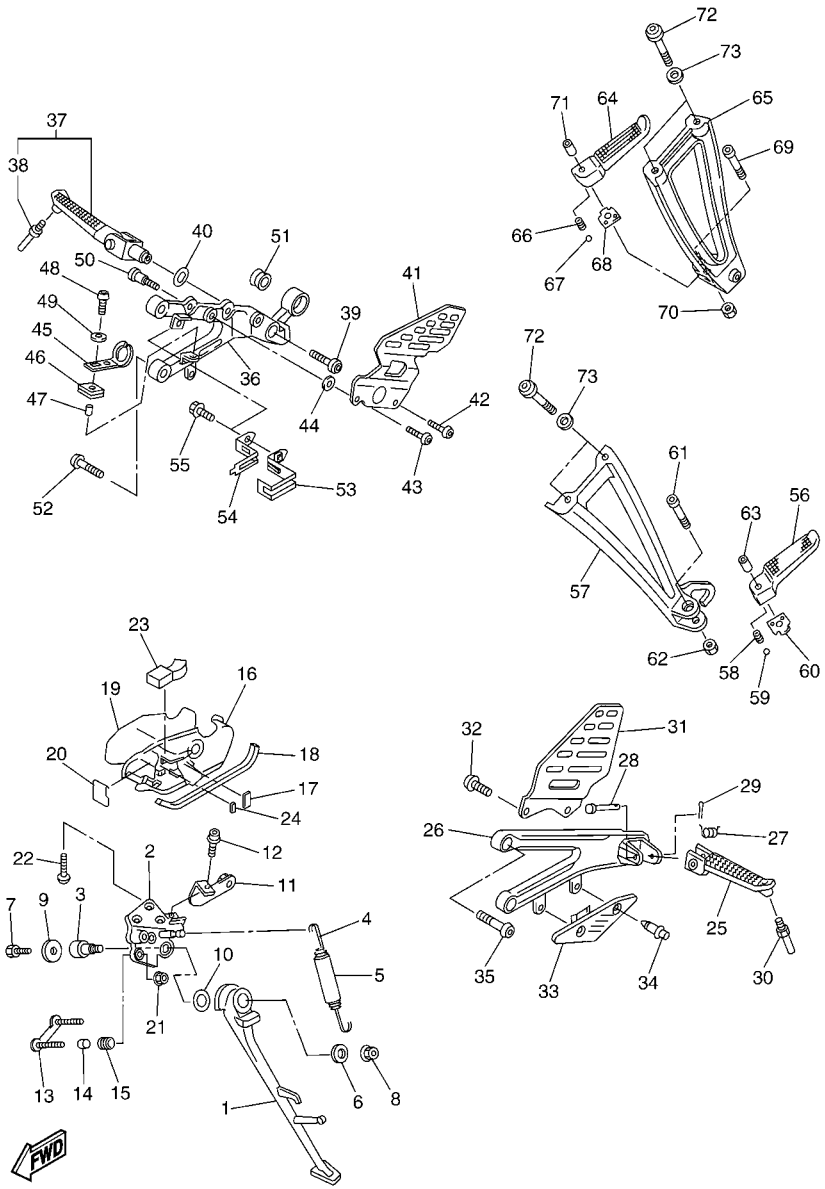

13S1300-G350

FIG. 35 STAND & FOOTREST

REF. NO.	PART NO.	DESCRIPTION	13SL	13SN				REMARKS
55	95024–06012	BOLT, FLG.(SMALL HEAD)	1	1				
56	5JJ–27431–00	FOOTREST, REAR 1	1	1				
57	2C0–2741L–00	BRACKET 4	1	1				
58	90501–12743	SPRING, COMPRESSION	1	1				
59	93501–04011	BALL	1	1				
60	5JJ–27437–01	WASHER, SPECIAL	1	1				
61	91314–06035	BOLT, HEXAGON SOCKET HEAD	1	1				
62	95604–06200	NUT, U FLANGE	1	1				
63	90387–06697	COLLAR	1	1				
64	5JJ–27441–00	FOOTREST, REAR 2	1	1				
65	2C0–2742L–00	BRACKET 5	1	1				
66	90501–12743	SPRING, COMPRESSION	1	1				
67	93501–04011	BALL	1	1				
68	5JJ–27437–01	WASHER, SPECIAL	1	1				
69	91314–06035	BOLT, HEXAGON SOCKET HEAD	1	1				
70	95604–06200	NUT, U FLANGE	1	1				
71	90387–06697	COLLAR	1	1				
72	90111–08066	BOLT,HEX. SOCKET BUTTON	4	4				
73	13S–27417–00	WASHER, FOOTREST	4	4				

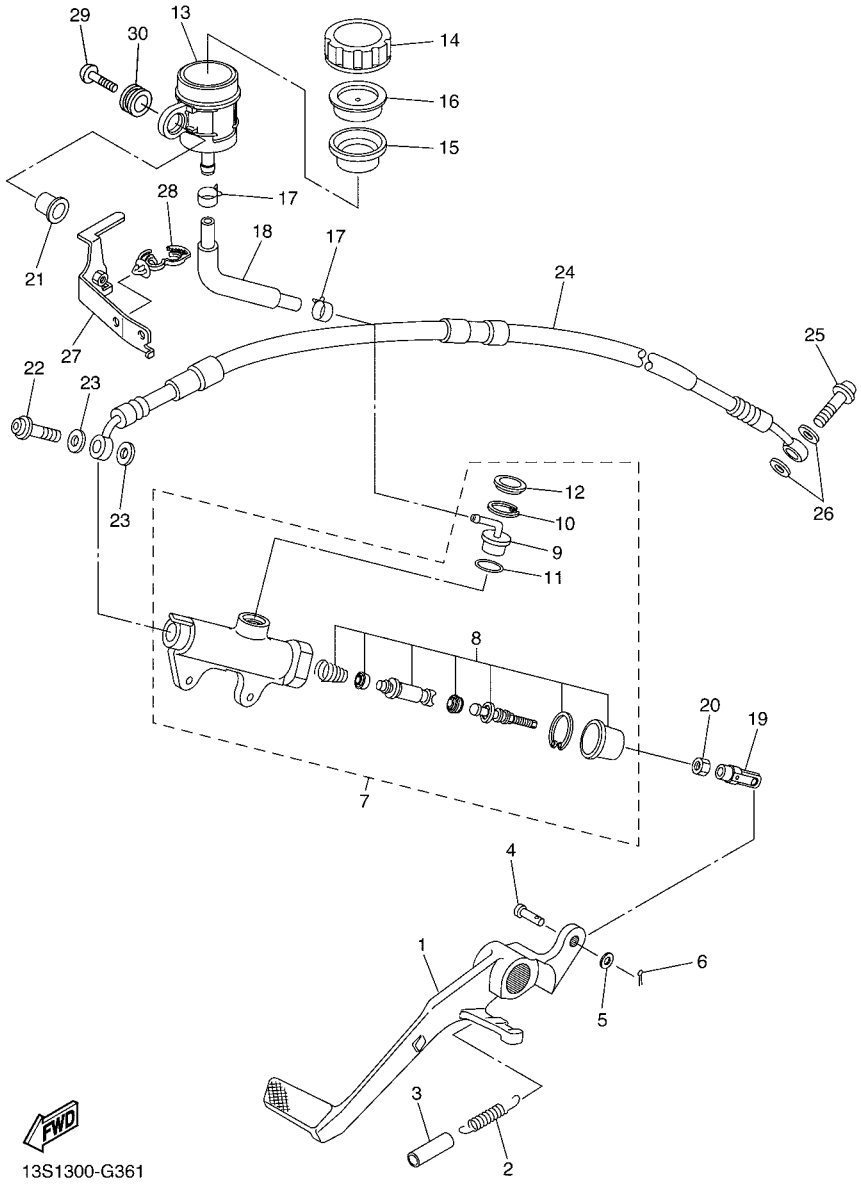

FIG. 36 REAR MASTER CYLINDER

REF. NO.	PART NO.	DESCRIPTION	13SL	13SN				REMARKS
1	2C0–27211–00	PEDAL, BRAKE	1	1				
2	90506–20193	SPRING, TENSION	1	1				
3	90446–15386	HOSE	1	1				
4	91702–06018	PIN, CLEVIS	1	1				
5	92907–06200	WASHER	1	1				
6	91402–16012	PIN, COTTER	1	1				
7	2C0–2583V–01	RR. MASTER CYLINDER ASSY.	1	1				
8	5XT–W0042–60	.CYLINDER KIT, MASTER	1	1				
9	4ML–2582A–50	.JOINT	1	1				
10	2VN–25866–00	.CIRCLIP	1	1				
11	93210–15620	.O-RING	1	1				
12	3FV–2589A–00	.COVER, DUST	1	1				
13	2C0–25894–00	TANK, RESERVOIR	1	1				
14	4PX–25852–00	CAP, RESERVOIR	1	1				
15	2VN–25854–00	GASKET, DIAPHRAGM	1	1				
16	2VN–25855–00	BUSH,DIAPHRAGM	1	1				
17	90467–12085	CLIP	2	2				
18	2C0–25895–00	HOSE, RESERVOIR	1	1				
19	4XV–27222–01	JOINT	1	1				
20	95307–08700	NUT	1	1				
21	90387–05028	COLLAR	1	1				
22	90401–10172	BOLT, UNION	1	1				
23	90430–10005	GASKET	2	2				
24	2C0–25874–00	HOSE, BRAKE	1	1				
25	90401–10172	BOLT, UNION	1	1				
26	90430–10005	GASKET	2	2				
27	13S–21228–00	BRACKET, RESERVE TANK	1	1				

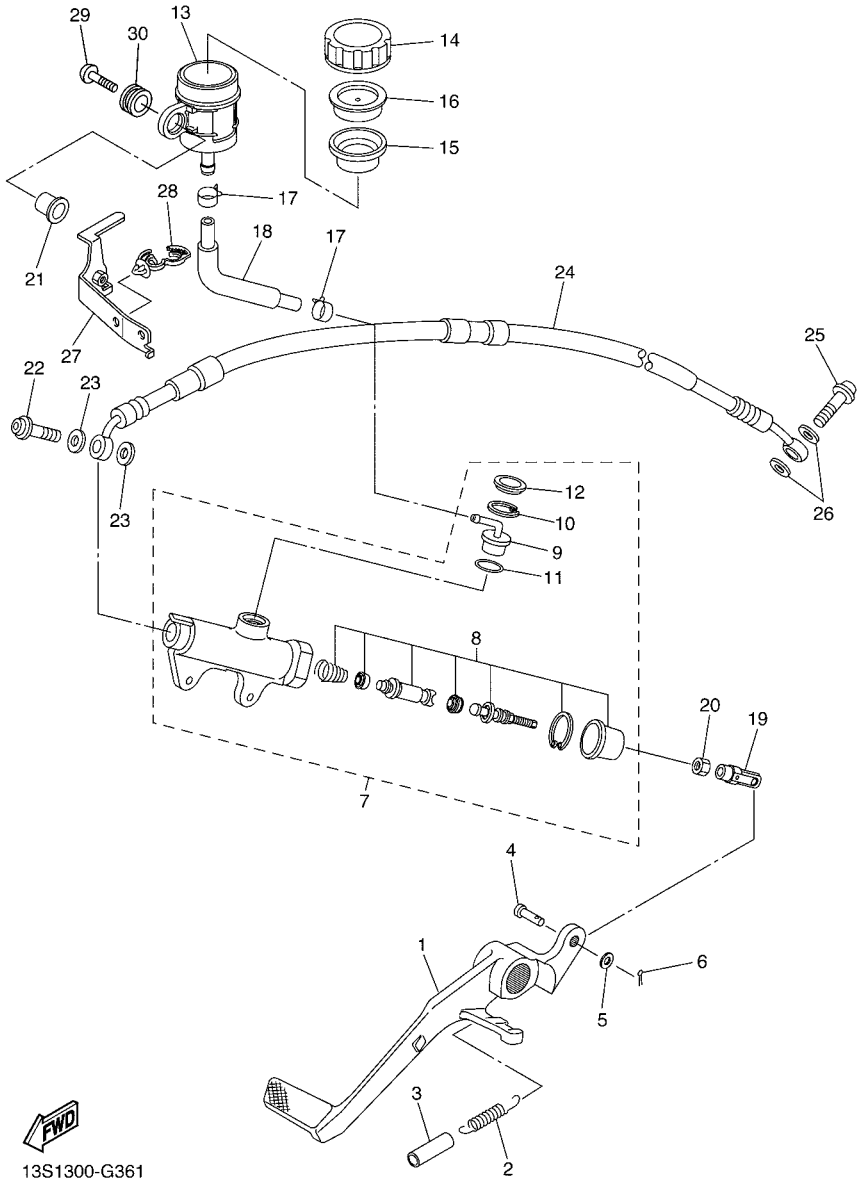

FIG. 36 REAR MASTER CYLINDER

REF. NO.	PART NO.	DESCRIPTION	13SL	13SN				REMARKS
28	90464–13249	CLAMP	1	1				
29	90111–05026	BOLT,HEX. SOCKET BUTTON	1	1				
30	2C0–26326–00	GROMMET	1	1				

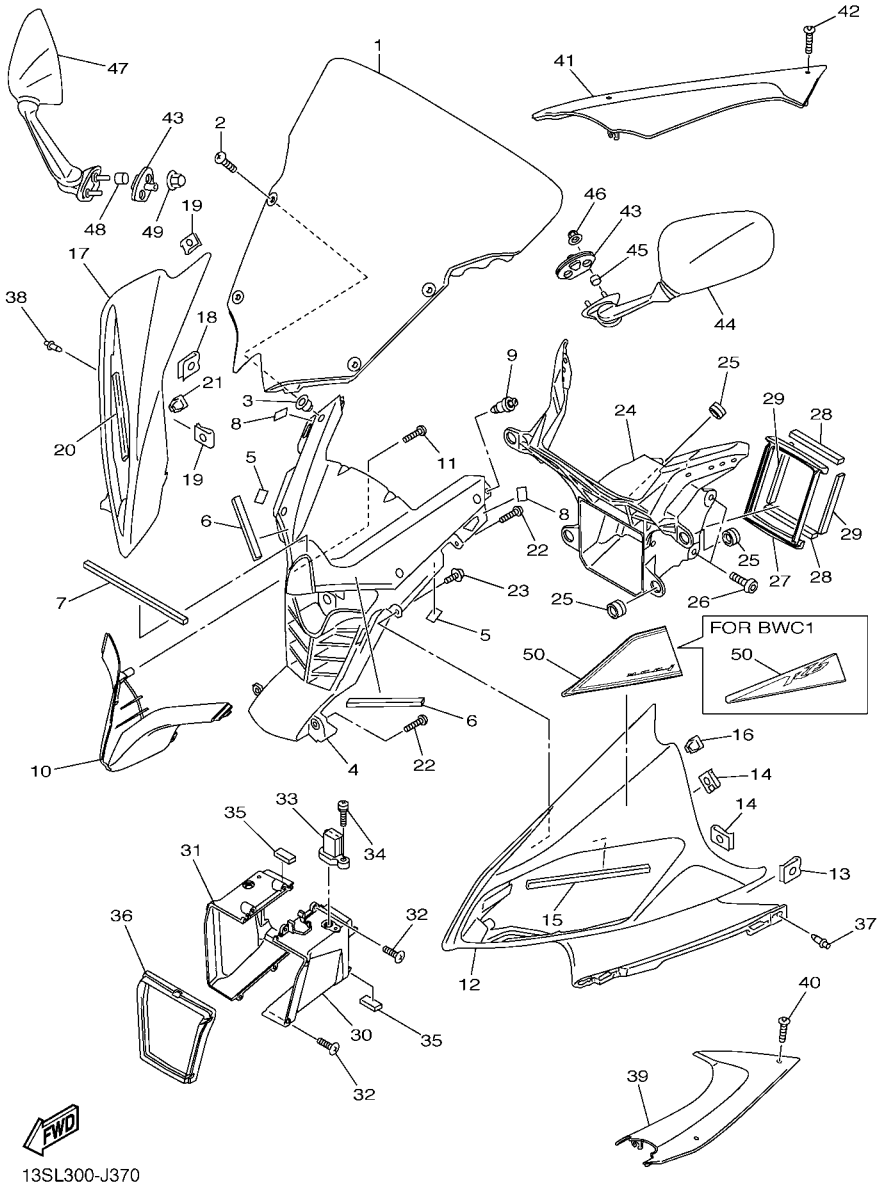

FIG. 37 COWLING 1

REF. NO.	PART NO.	DESCRIPTION	13SL	13SN				REMARKS
1	13S–28381–00	WINDSHIELD	1	1				
2	90150–05023	SCREW, ROUND HEAD	4	4				
3	90179–05523	NUT	4	4				
4	13S–2836K–00	PANEL, INNER 1	1	1				
5	3P6–28217–00	DAMPER 1	2	2				
6	13S–28227–00	DAMPER 2	2	2				
7	13S–28237–00	DAMPER 3	1	1				
8	13S–28371–00	DAMPER	2	2				
9	90269–06046	RIVET	2	2				
10	13S–28365–00–P0	COVER	1	1				MBL2
11	97702–40016	SCREW, TAPPING	2	2				
12	13S–2835G–00–P0	BODY, FRONT UPPER 1	1	1				UR FOR DPBMC
	13S–2835G–00–P1	BODY, FRONT UPPER 1	1	1				UR FOR BWC1
	13S–2835G–00–P3	BODY, FRONT UPPER 1	1	1				UR FOR SMX
13	90183–05076	NUT, SPRING	1	1				
14	90183–05042	NUT, SPRING	2	2				
15	2C0–28455–00	DAMPER, 4	1	1				
16	90480–01605	GROMMET	1	1				
17	13S–2835H–00–P0	BODY, FRONT UPPER 2	1	1				UR FOR DPBMC
	13S–2835H–00–P1	BODY, FRONT UPPER 2	1	1				UR FOR BWC1
	13S–2835H–00–P3	BODY, FRONT UPPER 2	1	1				UR FOR SMX
18	90183–05076	NUT, SPRING	1	1				
19	90183–05042	NUT, SPRING	2	2				
20	2C0–28455–00	DAMPER, 4	1	1				
21	90480–01605	GROMMET	1	1				
22	97707–50016	SCREW, TRUSS HEAD TAPPING	4	4				
23	97707–40012	SCREW, TAPPING	2	2				

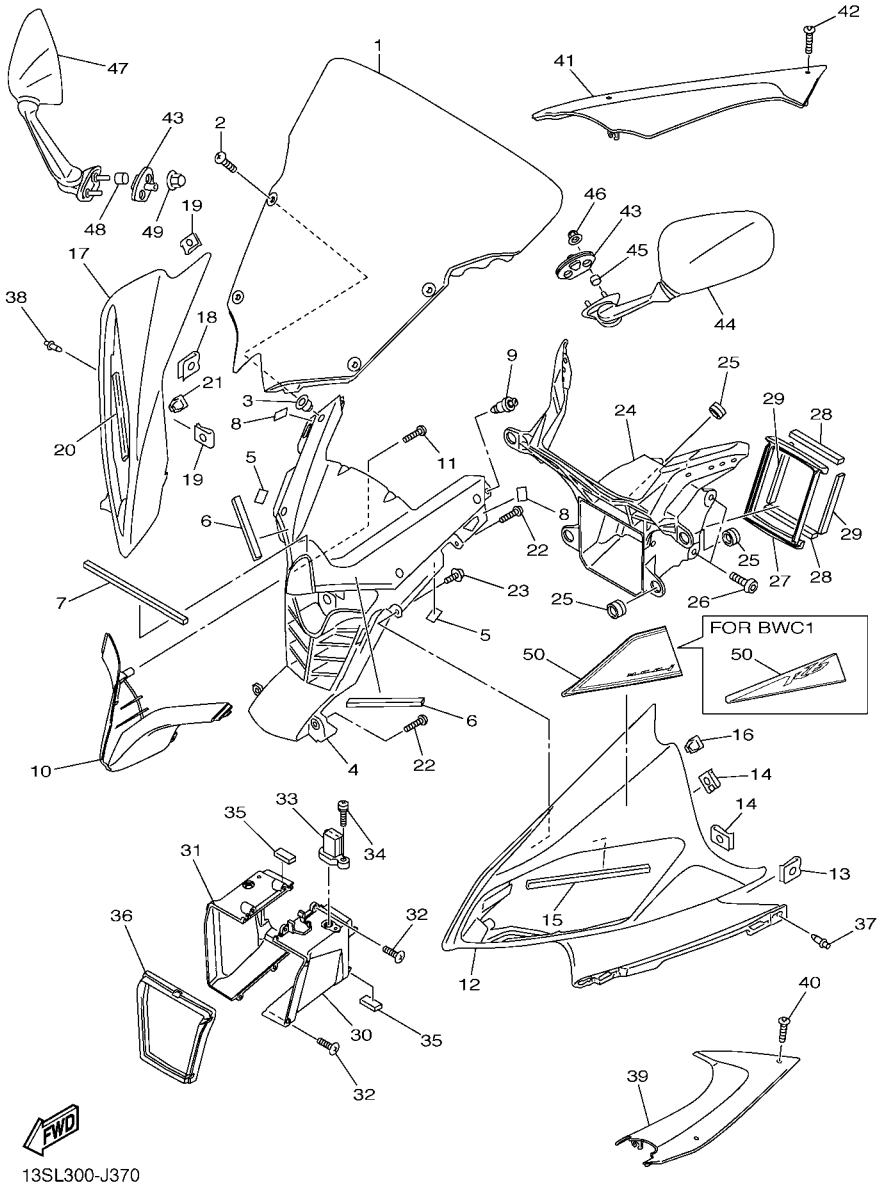

FIG. 37 COWLING 1

REF. NO.	PART NO.	DESCRIPTION	13SL	13SN				REMARKS
24	13S–28356–00	STAY 1	1	1				
25	4XV–83513–00	DAMPER	7	7				
26	90111–06038	BOLT,HEX. SOCKET BUTTON	4	4				
27	2C0–28342–01	JOINT	1	1				
28	2C0–28217–00	DAMPER 1	2	2				
29	2C0–28227–00	DAMPER 2	2	2				
30	13S–2838R–00	DUCT 2	1	1				
31	13S–2838T–00	DUCT 3	1	1				
32	97702–40016	SCREW, TAPPING	4	4				
33	8FP–85886–00	SENSOR, AIR TEMPERATURE	1	1				
34	97702–50116	SCREW, TAPPING	1	1				
35	51Y–21639–00	DAMPER 2	4	4				
36	2C0–28371–00	DAMPER	1	1				
37	90269–06008	RIVET	1	1				
38	90269–06008	RIVET	1	1				
39	13S–2837L–00	PANEL, CONSOLE 1	1	1				
40	90111–05021	BOLT,HEX. SOCKET BUTTON	2	2				
41	13S–2837M–00	PANEL, CONSOLE 2	1	1				
42	90111–05021	BOLT,HEX. SOCKET BUTTON	2	2				
43	13S–26298–00	PLATE, MIRROR FITTING 1	2	2				
44	13S–26280–10	REAR VIEW MIRROR ASSY (LEFT)	1	1				
45	90387–064T3	COLLAR	2	2				
46	90176–06008	NUT, CROWN	2	2				
47	13S–26290–10	REAR VIEW MIRROR ASSY (RIGHT)	1	1				
48	90387–064T3	COLLAR	2	2				
49	90176–06008	NUT, CROWN	2	2				
50	13S–2832L–00	GRAPHIC, 13	1	1				UR FOR DPBMC

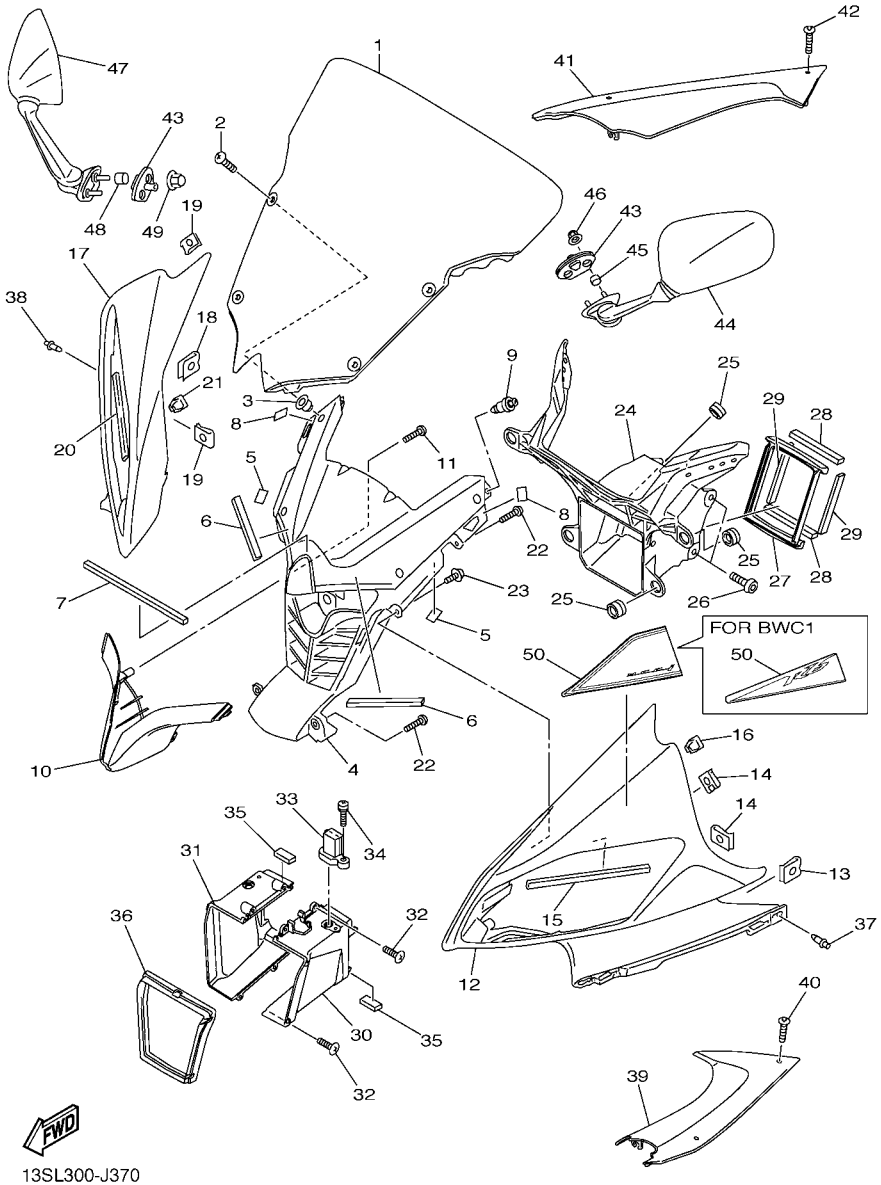

FIG. 37 COWLING 1

REF. NO.	PART NO.	DESCRIPTION	13SL	13SN				REMARKS
50	13S–2832L–B0	GRAPHIC, 13	1	1				UR FOR BWC1

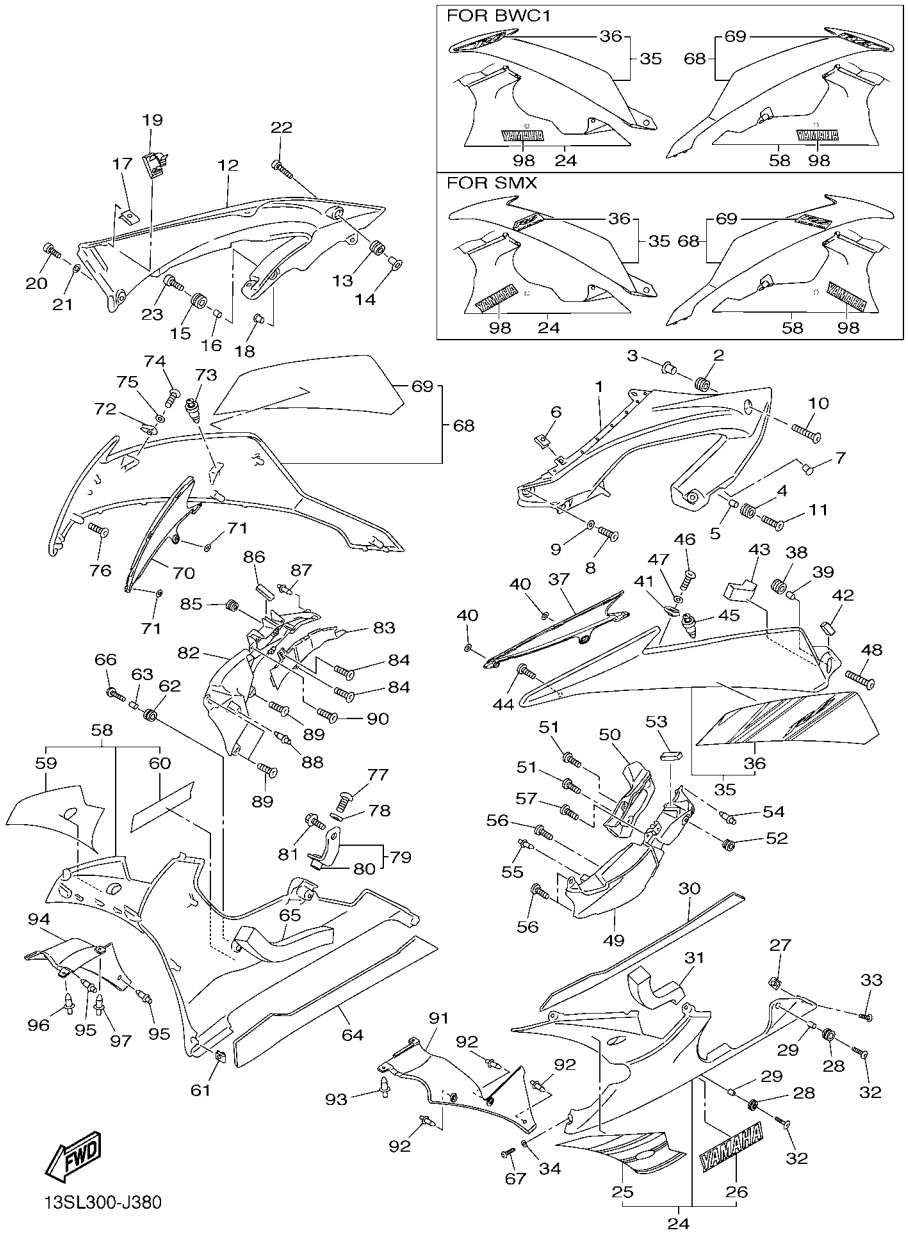

FIG. 38 COWLING 2

REF. NO.	PART NO.	DESCRIPTION	13SL	13SN				REMARKS
1	13S–2117V–00–P0	COVER 7	1	1				UR FOR DPBMC
	13S–2117V–00–P1	COVER 7	1	1				UR FOR BWC1
	13S–2117V–00–P3	COVER 7	1	1				UR FOR SMX
2	90480–12613	GROMMET	1	1				
3	90387–067K8	COLLAR	1	1				
4	90480–14003	GROMMET	1	1				
5	90387–06057	COLLAR	1	1				
6	90183–05076	NUT, SPRING	1	1				
7	90338–06134	PLUG	1	1				
8	90111–05003	BOLT,HEX. SOCKET BUTTON	1	1				
9	90202–05180	WASHER, PLATE	1	1				
10	90111–06063	BOLT,HEX. SOCKET BUTTON	1	1				
11	90111–06040	BOLT,HEX. SOCKET BUTTON	1	1				
12	13S–2117W–00–P0	COVER 8	1	1				UR FOR DPBMC
	13S–2117W–00–P1	COVER 8	1	1				UR FOR BWC1
	13S–2117W–00–P3	COVER 8	1	1				UR FOR SMX
13	90480–12613	GROMMET	1	1				
14	90387–067K8	COLLAR	1	1				
15	90480–14003	GROMMET	1	1				
16	90387–06057	COLLAR	1	1				
17	90183–05076	NUT, SPRING	1	1				
18	90338–06134	PLUG	1	1				
19	90464–20014	CLAMP	1	1				
20	90111–05003	BOLT,HEX. SOCKET BUTTON	1	1				
21	90202–05180	WASHER, PLATE	1	1				
22	90111–06063	BOLT,HEX. SOCKET BUTTON	1	1				
23	90111–06040	BOLT,HEX. SOCKET BUTTON	1	1				

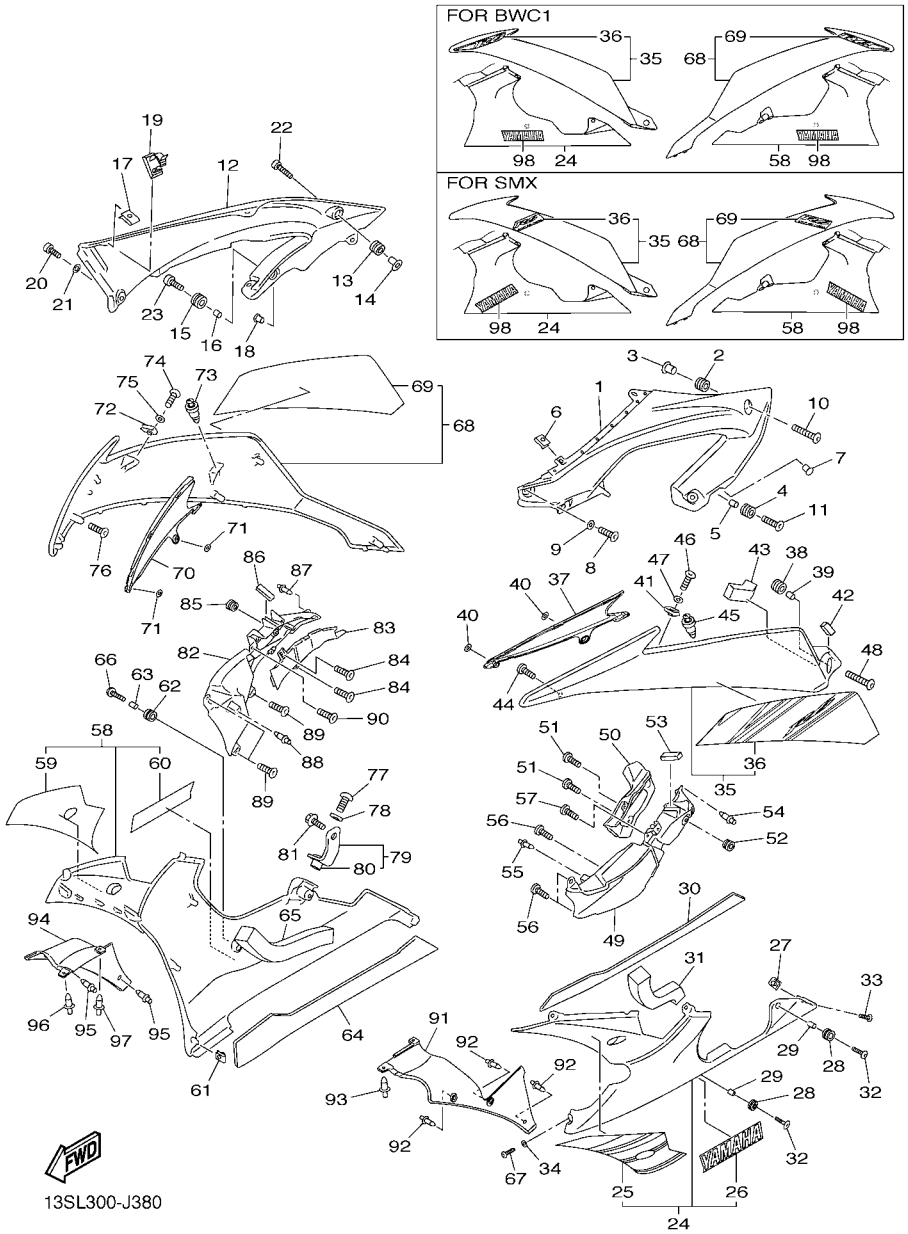

FIG. 38 COWLING 2

REF. NO.	PART NO.	DESCRIPTION	13SL	13SN				REMARKS
24	13S–W2838–00–P3	UNDER COVER COMP. 1	1	1				UR BWC1 FOR DPBMC
	13S–28385–00–P3	COVER, UNDER	1	1				UR FOR BWC1
	13S–28385–00–P1	COVER, UNDER	1	1				UR FOR SMX
25	13S–283A1–A0	.GRAPHIC, UNDER COVER 1	1	1				FOR DPBMC
26	14B–2153E–80	.EMBLEM, YAMAHA	1	1				FOR DPBMC
27	90183–05076	NUT, SPRING	1	1				
28	90480–14003	GROMMET	2	2				
29	90387–06057	COLLAR	2	2				
30	13S–2838G–00	SEAT 1	1	1				
31	13S–2836U–00	DAMPER, LOCATING 2	1	1				
32	90111–06040	BOLT,HEX. SOCKET BUTTON	2	2				
33	90111–05003	BOLT,HEX. SOCKET BUTTON	1	1				
34	90202–05180	WASHER, PLATE	1	1				
35	13S–W283U–13–P0	GRAPHIC SET PANEL 1	1	1				UR FOR DPBMC
	13S–W283U–10–P1	GRAPHIC SET PANEL 1	1	1				UR FOR BWC1
	13S–W283U–50–P3	GRAPHIC SET PANEL 1	1	1				UR MBL2 FOR SMX
36	13S–28391–A0	.GRAPHIC, 1	1	1				UR FOR DPBMC
	13S–28391–B0	.GRAPHIC, 1	1	1				UR FOR BWC1
	13S–28328–60	.EMBLEM	1	1				UR FOR SMX
37	13S–28219–00	COVER 1	1	1				
38	90480–14003	GROMMET	1	1				
39	90387–06057	COLLAR	1	1				
40	90183–05M02	NUT, SPRING	2	2				
41	90183–05076	NUT, SPRING	1	1				
42	13S–28415–00	DAMPER 1	1	1				
43	13S–24183–00	DAMPER, LOCATING 3	1	1				
44	97707–50016	SCREW, TRUSS HEAD TAPPING	1	1				

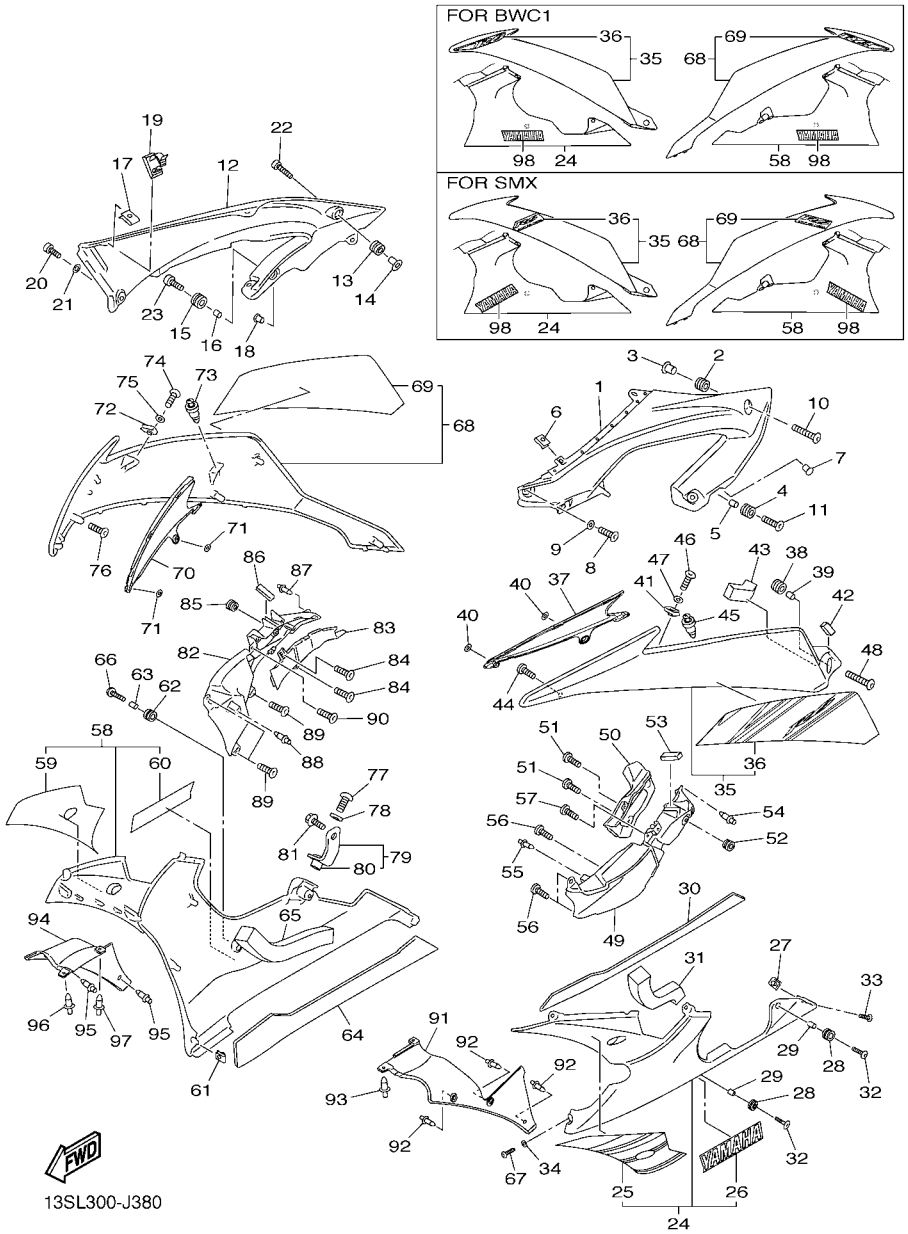

FIG. 38 COWLING 2

REF. NO.	PART NO.	DESCRIPTION	13SL	13SN				REMARKS
45	90269–07007	RIVET	1	1				
46	90111–05003	BOLT,HEX. SOCKET BUTTON	1	1				
47	90202–05180	WASHER, PLATE	1	1				
48	90111–06040	BOLT,HEX. SOCKET BUTTON	1	1				
49	13S–2137U–00	GUIDE, AIR 1	1	1				
50	13S–2137K–00	GUIDE, AIR 3	1	1				
51	97702–50016	SCREW, TAPPING	2	2				
52	90480–01558	GROMMET	1	1				
53	13S–28217–00	DAMPER 1	1	1				
54	90269–06008	RIVET	1	1				
55	90269–06081	RIVET	1	1				
56	97707–50016	SCREW, TRUSS HEAD TAPPING	3	3				
57	97702–50020	SCREW, TAPPING	1	1				
58	13S–W2839–00–P3	UNDER COVER COMP. 2	1	1				UR BWC1 FOR DPBMC
	13S–28395–00–P3	COVER, UNDER 2	1	1				UR FOR BWC1
	13S–28395–00–P1	COVER, UNDER 2	1	1				UR FOR SMX
59	13S–283A2–A0	.GRAPHIC, UNDER COVER 2	1	1				FOR DPBMC
60	14B–2153E–80	.EMBLEM, YAMAHA	1	1				FOR DPBMC
61	90183–05076	NUT, SPRING	1	1				
62	90480–14003	GROMMET	1	1				
63	90387–06057	COLLAR	1	1				
64	13S–2848K–00	SEAT 2	1	1				
65	13S–2847R–00	DAMPER 10	1	1				
66	90111–06040	BOLT,HEX. SOCKET BUTTON	1	1				
67	90111–05003	BOLT,HEX. SOCKET BUTTON	1	1				
68	13S–W283V–13–P0	GRAPHIC SET PANEL 2	1	1				UR FOR DPBMC
	13S–W283V–10–P1	GRAPHIC SET PANEL 2	1	1				UR FOR BWC1

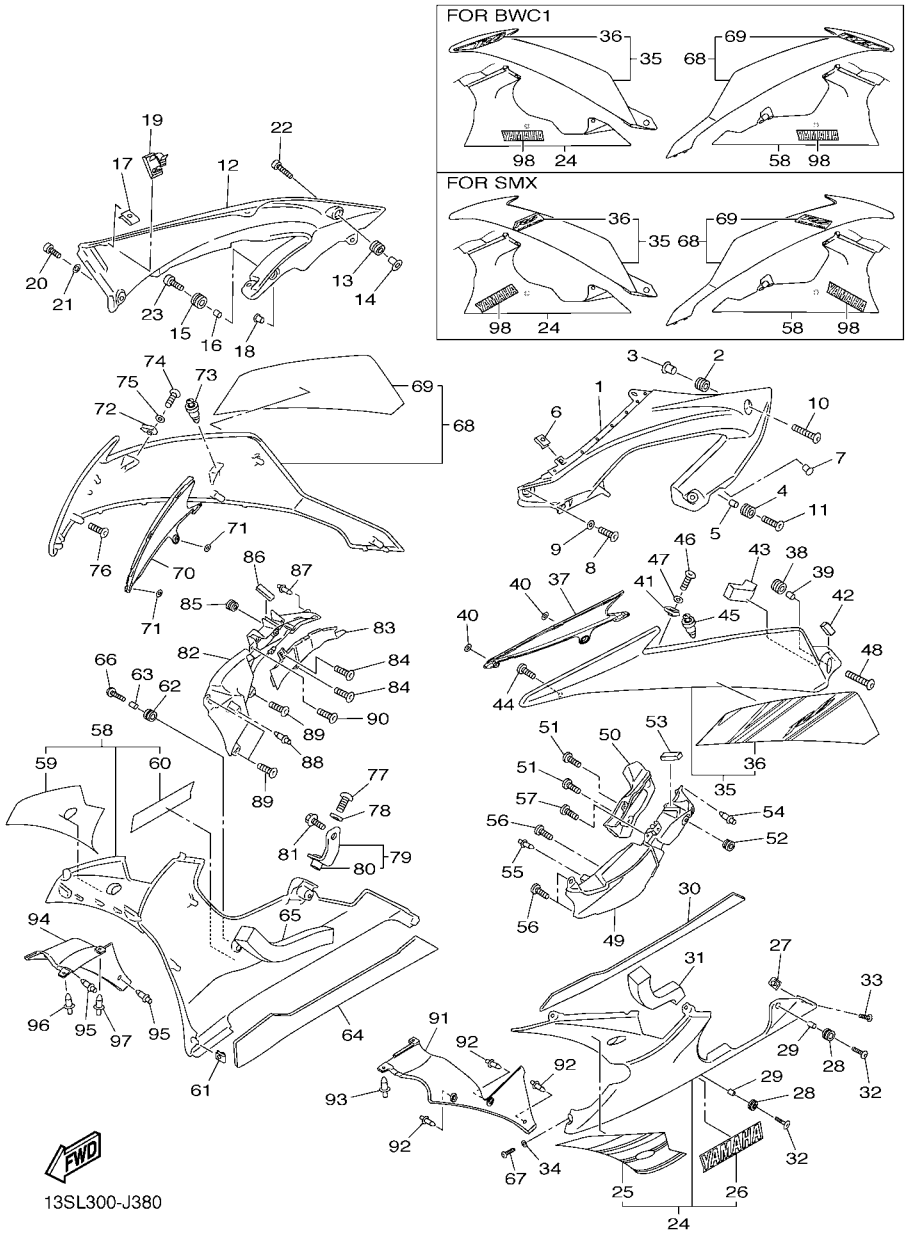

FIG. 38 COWLING 2

REF. NO.	PART NO.	DESCRIPTION	13SL	13SN				REMARKS
68	13S–W283V–50–P3	GRAPHIC SET PANEL 2	1	1				UR MBL2 FOR SMX
69	13S–28392–A0	.GRAPHIC, 2	1	1				UR FOR DPBMC
	13S–28392–B0	.GRAPHIC, 2	1	1				UR FOR BWC1
	13S–28338–60	.EMBLEM	1	1				UR FOR SMX
70	13S–28229–00	COVER 2	1	1				
71	90183–05M02	NUT, SPRING	2	2				
72	90183–05076	NUT, SPRING	1	1				
73	90269–07007	RIVET	1	1				
74	90111–05003	BOLT,HEX. SOCKET BUTTON	1	1				
75	90202–05180	WASHER, PLATE	1	1				
76	97707–50016	SCREW, TRUSS HEAD TAPPING	2	2				
77	90109–06207	BOLT	1	1				
78	90202–10024	WASHER, PLATE	1	1				
79	13S–2836G–00	BRACKET 4	1	1				
80	90179–06059	.NUT	1	1				
81	90105–06020	BOLT, FLANGE	1	1				
82	13S–2137V–00	GUIDE, AIR 2	1	1				
83	13S–2137L–00	GUIDE, AIR 4	1	1				
84	97702–50016	SCREW, TAPPING	2	2				
85	90480–01558	GROMMET	1	1				
86	13S–28217–00	DAMPER 1	1	1				
87	90269–06008	RIVET	1	1				
88	90269–06081	RIVET	1	1				
89	97707–50016	SCREW, TRUSS HEAD TAPPING	3	3				
90	97702–50020	SCREW, TAPPING	1	1				
91	13S–2836L–00	PANEL, INNER 2	1	1				
92	90269–06008	RIVET	3	3				

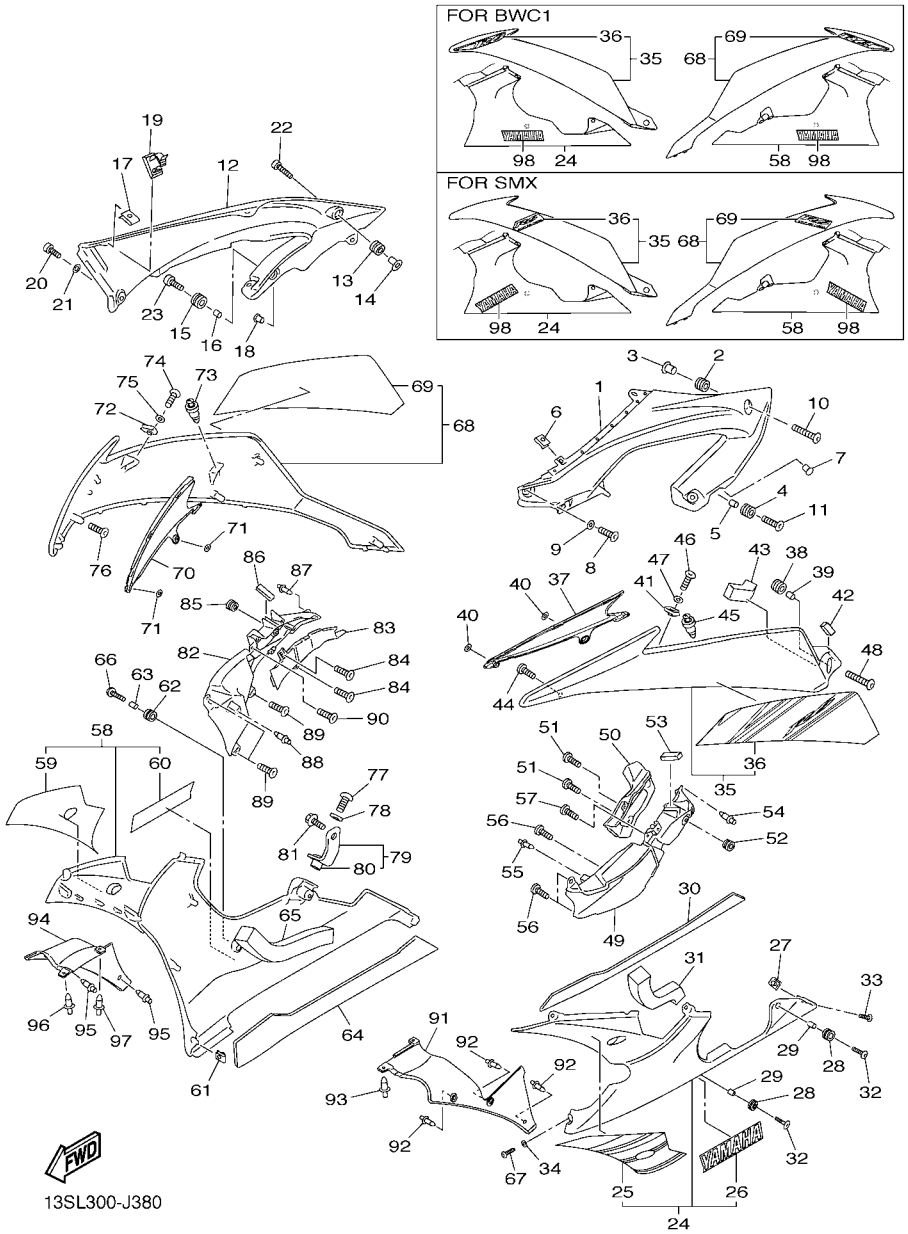

FIG. 38 COWLING 2

REF. NO.	PART NO.	DESCRIPTION	13SL	13SN				REMARKS
93	90269–06002	RIVET	1	1				
94	13S–2836M–00	PANEL, INNER 3	1	1				
95	90269–06008	RIVET	2	2				
96	90269–06002	RIVET	1	1				
97	90269–06008	RIVET	1	1				
98	13S–2153E–60	EMBLEM, YAMAHA	2	2				UR FOR BWC1
	13S–2153E–70	EMBLEM, YAMAHA	2	2				UR FOR SMX

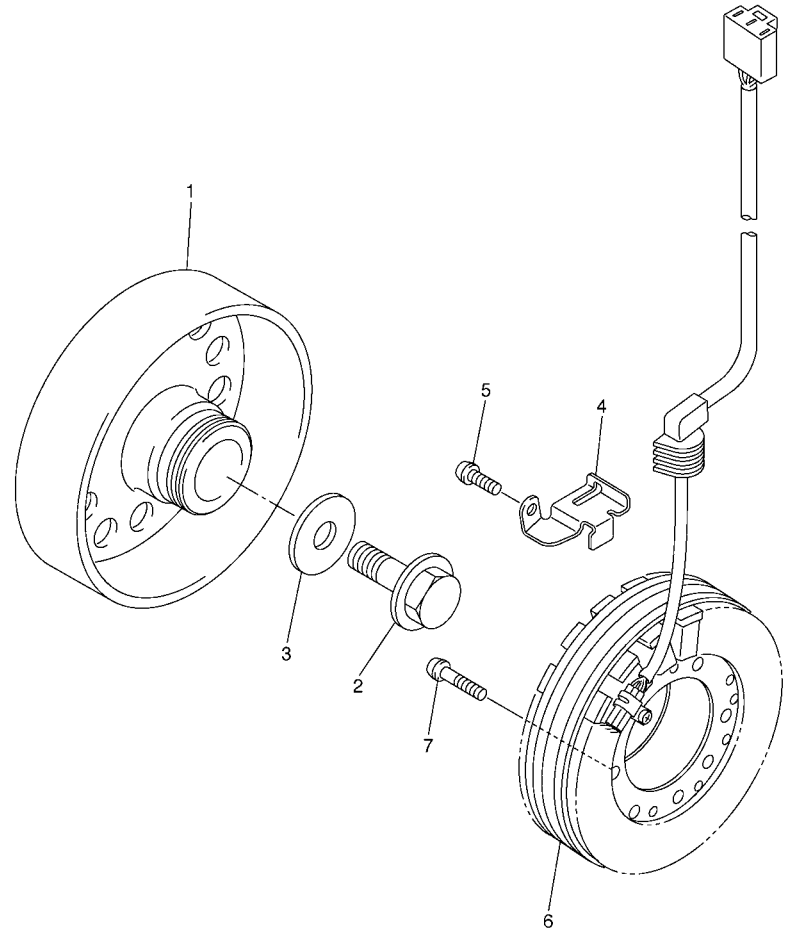

2C01300-E390

FIG. 39 GENERATOR

REF. NO.	PART NO.	DESCRIPTION	13SL	13SN				REMARKS
1	2C0–81450–00	ROTOR ASSY	1	1				
2	90105–126A8	BOLT, FLANGE	1	1				
3	90201–12008	WASHER, PLATE	1	1				
4	2C0–15484–00	CLAMP 2	1	1				
5	90149–06082	SCREW	1	1				
6	2C0–81410–00	STATOR ASSY	1	1				
7	90149–06080	SCREW	3	3				

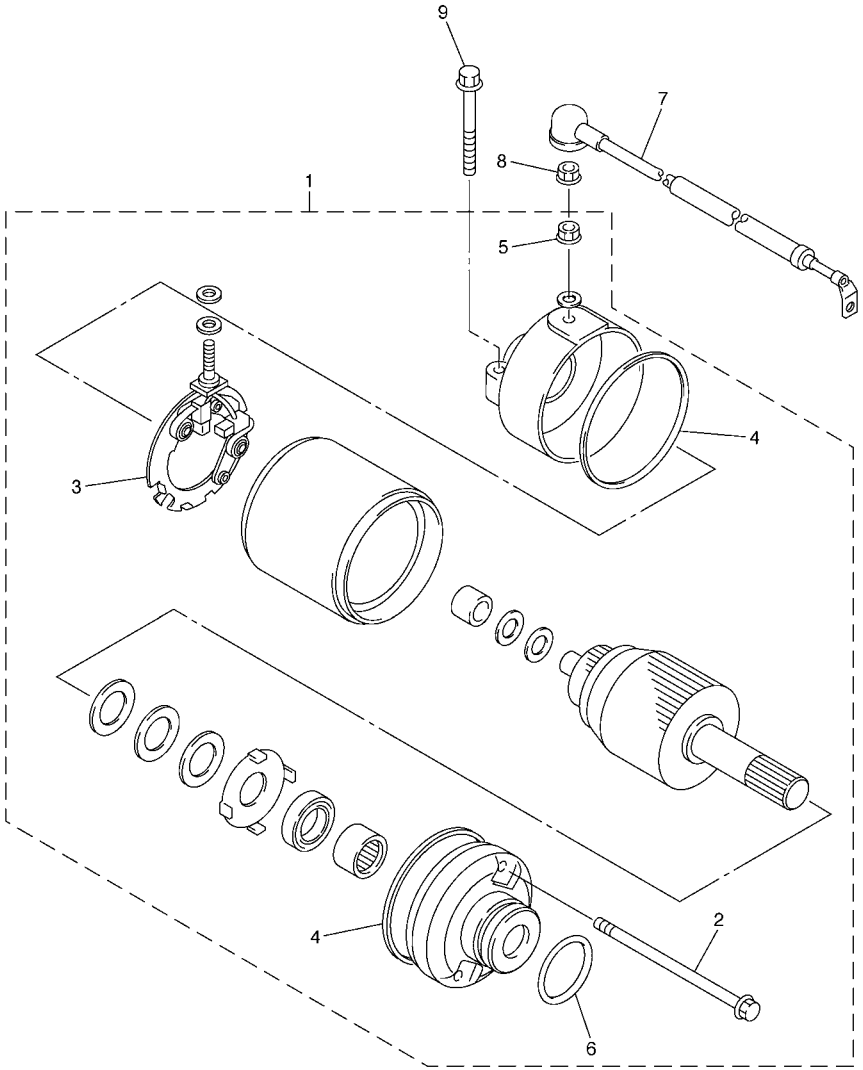

2C01300-E400

FIG. 40 STARTING MOTOR

REF. NO.	PART NO.	DESCRIPTION	13SL	13SN				REMARKS
1	2C0–81890–00	MOTOR ASSY	1	1				
2	4WP–81826–00	.BOLT	2	2				
3	4WP–81801–00	.BRUSH SET	1	1				
4	4WP–81844–00	.GASKET	2	2				
5	4XV–8182A–00	.NUT	1	1				
6	1FK–81847–00	.O-RING	1	1				
7	2C0–81815–00	CORD, STARTER MOTOR	1	1				
8	4XV–8182A–00	NUT	1	1				
9	90105–06083	BOLT, FLANGE	2	2				

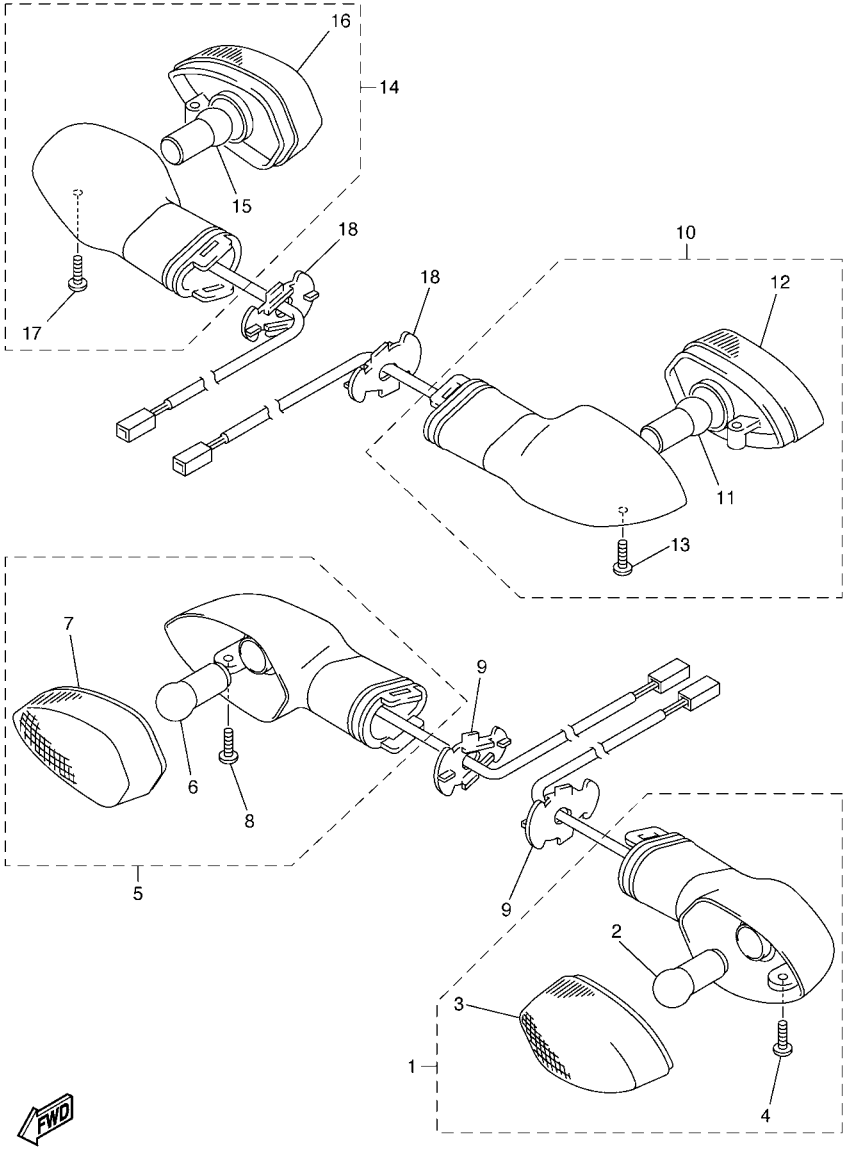

FIG. 41 FLASHER LIGHT

REF. NO.	PART NO.	DESCRIPTION	13SL	13SN				REMARKS
1	2C0–83310–00	FRONT FLASHER LIGHT ASSY 1	1	1				
2	2C0–83311–00	.BULB, FLASHER (12V-10W)	1	1				
3	2C0–8333A–00	.LENS COMP 1	1	1				
4	97702–40010	.SCREW, TAPPING	1	1				
5	2C0–83320–00	FRONT FLASHER LIGHT ASSY 2	1	1				
6	2C0–83311–00	.BULB, FLASHER (12V-10W)	1	1				
7	2C0–8334A–00	.LENS COMP 2	1	1				
8	97702–40010	.SCREW, TAPPING	1	1				
9	2C0–83318–00	STAY, FLASHER 1	2	2				
10	2C0–83330–00	REAR FLASHER LIGHT ASSY 1	1	1				
11	2C0–83311–00	.BULB, FLASHER (12V-10W)	1	1				
12	2C0–8334A–00	.LENS COMP 2	1	1				
13	97702–40010	.SCREW, TAPPING	1	1				
14	2C0–83340–00	REAR FLASHER LIGHT ASSY 2	1	1				
15	2C0–83311–00	.BULB, FLASHER (12V-10W)	1	1				
16	2C0–8333A–00	.LENS COMP 1	1	1				
17	97702–40010	.SCREW, TAPPING	1	1				
18	2C0–83318–00	STAY, FLASHER 1	2	2				

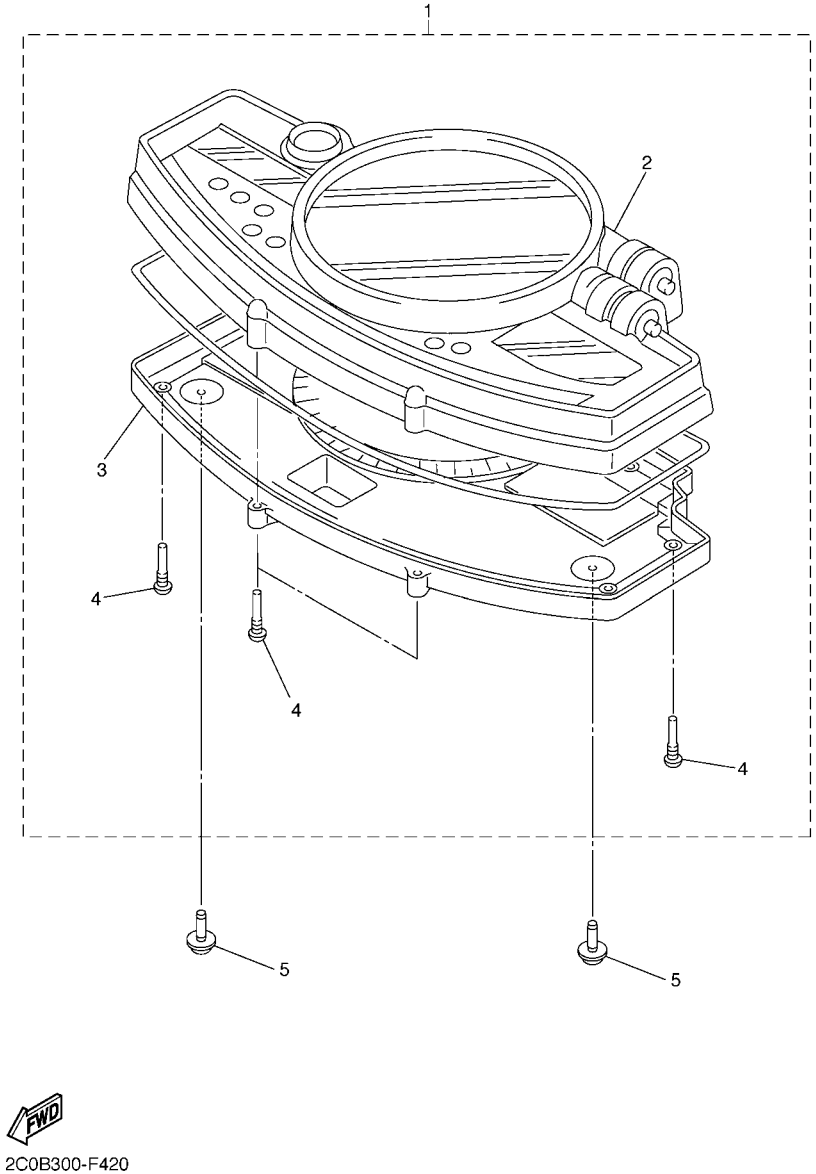

FIG. 42 METER

REF. NO.	PART NO.	DESCRIPTION	13SL	13SN				REMARKS
1	13S–83500–00	METER ASSY (KM/H)	1	1				
	13S–83500–10	METER ASSY (MPH)	1					FOR GBR
2	5VY–8353E–00	.CASE, METER UPPER	1	1				
3	5VY–83572–02	.CASE, SPEEDOMETER LOWER	1	1				
4	5PW–8352S–00	.SCREW, PANEL FTTING	11	11				
5	90160–05006	SCREW, ROUND TAPPING	3	3				

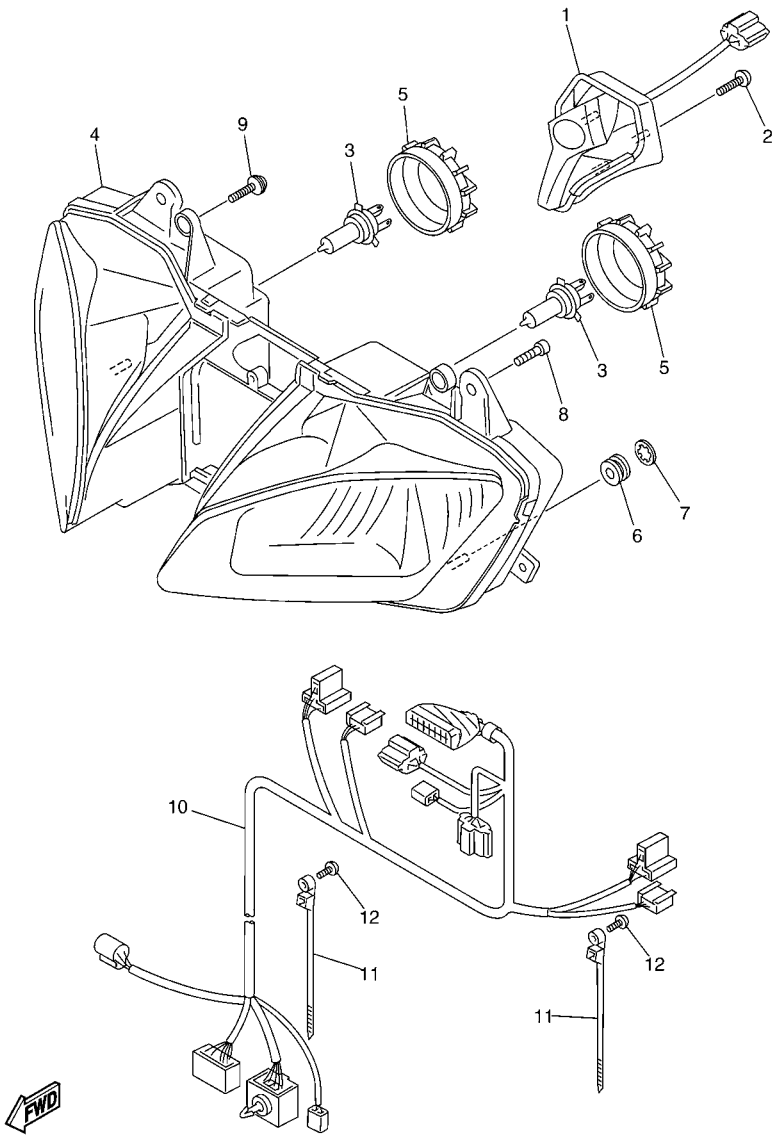

FIG. 43 HEADLIGHT

REF. NO.	PART NO.	DESCRIPTION	13SL	13SN				REMARKS
1	13S–84301–00	PILOT LIGHT ASSY 1	1	1				
2	97702–40016	SCREW, TAPPING	3	3				
3	4SV–84314–00	BULB (12V-55W)	2	2				(H7)HALOGEN
4	13S–84303–00	HEADLIGHT UNIT ASSY	1	1				
5	5SL–84397–00	COVER, SOCKET	2	2				
6	90480–08264	GROMMET	2	2				
7	90209–03274	WASHER	2	2				
8	97707–50016	SCREW, TRUSS HEAD TAPPING	5	5				
9	90160–05006	SCREW, ROUND TAPPING	4	4				
10	13S–84359–00	CORD, HEADLIGHT	1	1				
11	90464–47001	CLAMP	2	2				
12	97707–50016	SCREW, TRUSS HEAD TAPPING	2	2				

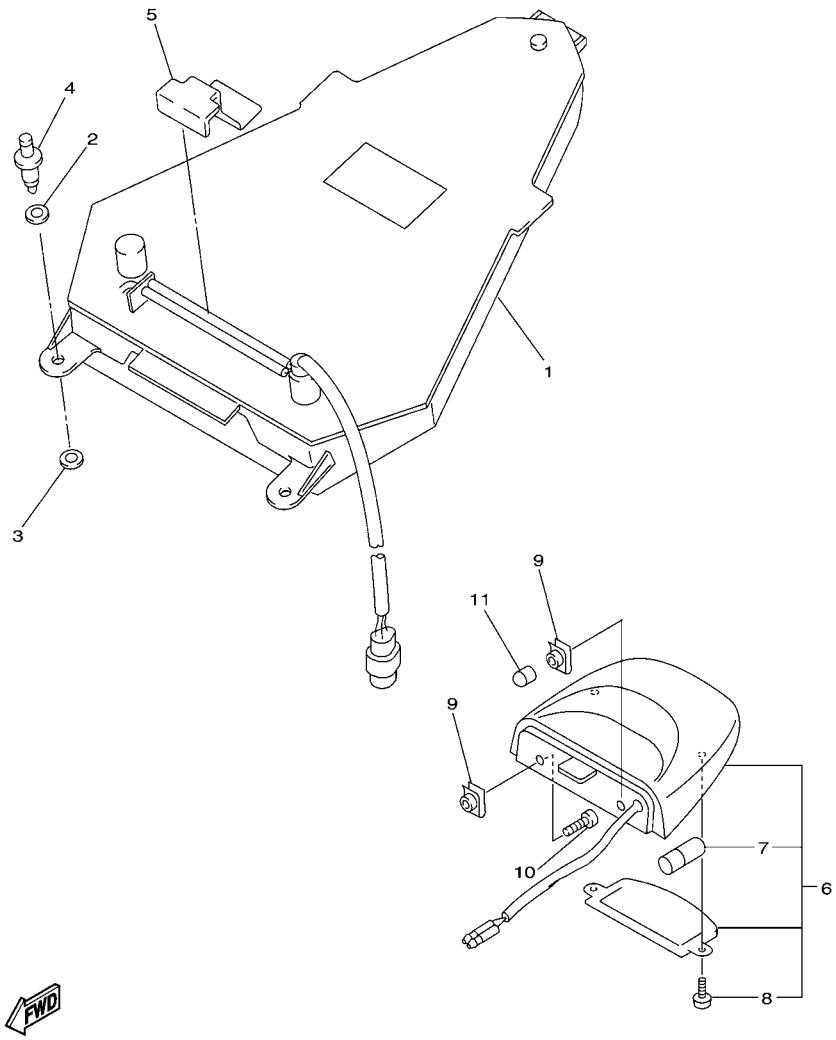

13S1300-G440

FIG. 44 TAILLIGHT

REF. NO.	PART NO.	DESCRIPTION	13SL	13SN				REMARKS
1	13S–84710–00	TAILLIGHT UNIT ASSY	1	1				
2	5SL–84753–00	DAMPER	2	2				
3	13S–2173M–00	SEAL 3	2	2				
4	90269–06001	RIVET	2	2				
5	2C0–2163F–00	COVER, REAR FENDER 3	1	1				
6	5VX–84745–01	LICENCE LIGHT UNIT ASSY	1	1				
7	4HC–84744–00	.BULB (12V-5W)	1	1				
8	97706–04012	.SCREW, TAPPING	2	2				
9	90183–05061	NUT, SPRING	2	2				
10	98902–05014	SCREW, BIND	2	2				
11	5VX–13569–01	PLUG, BLIND	1	1				

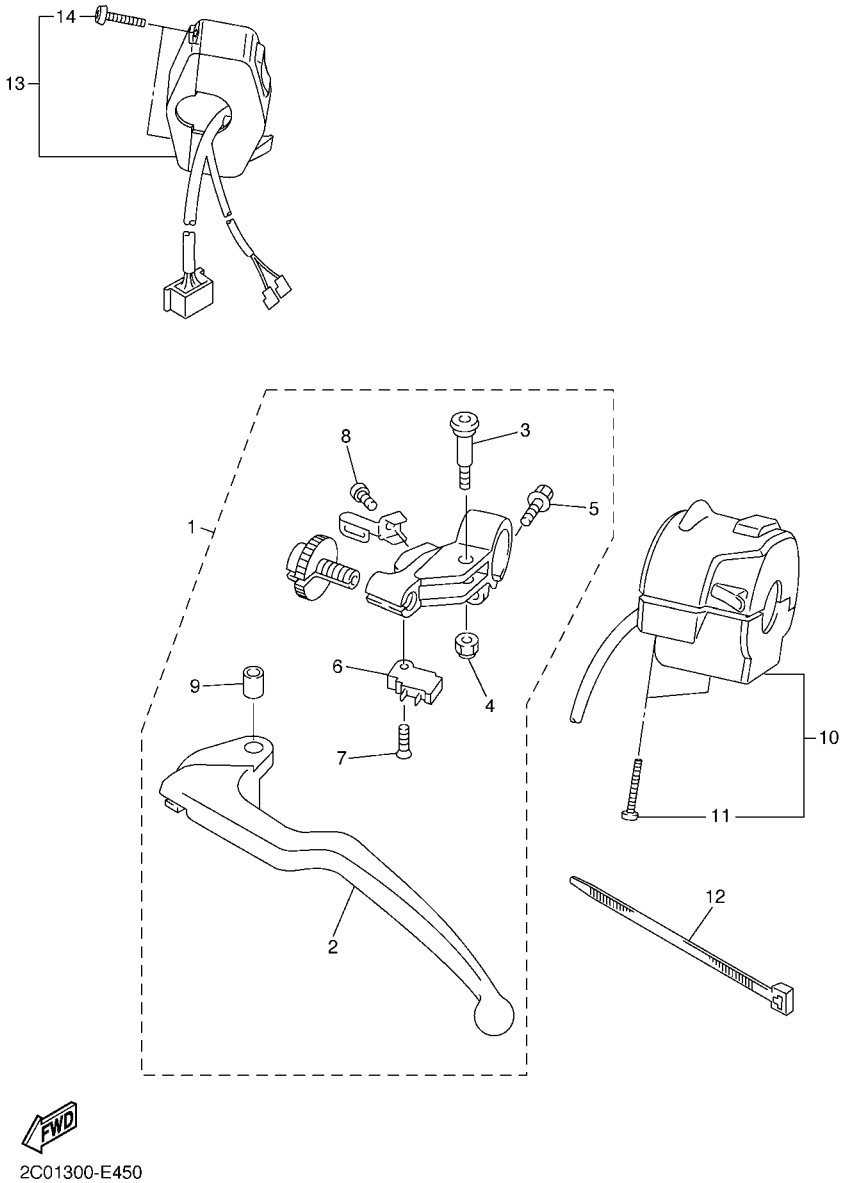

FIG. 45 HANDLE SWITCH & LEVER

REF. NO.	PART NO.	DESCRIPTION	13SL	13SN				REMARKS
1	2C0–82910–01	LEVER HOLDER ASSY (LEFT)	1	1				
2	5EB–83912–03	.LEVER 1	1	1				
3	2C0–83945–00	.BOLT, LEVER	1	1				
4	95607–06200	.NUT, SELF U-FLANGE	1	1				
5	95027–06020	.BOLT, FLANGE	1	1				
6	4XV–82917–01	.SWITCH	1	1				
7	98707–03016	.SCREW, FLAT HEAD	1	1				
8	98507–04010	.SCREW, PAN HEAD	1	1				
9	5JJ–83913–00	.COLLAR, LEVER 1	1	1				
10	13S–83969–00	SWITCH, HANDLE 5	1	1				
11	98507–05035	.SCREW, PAN HEAD	2	2				
12	3MA–82591–00	BAND	1	1				
13	13S–83975–00	SWITCH, HANDLE 2	1	1				
14	98507–05022	.SCREW, PAN HEAD	2	2				

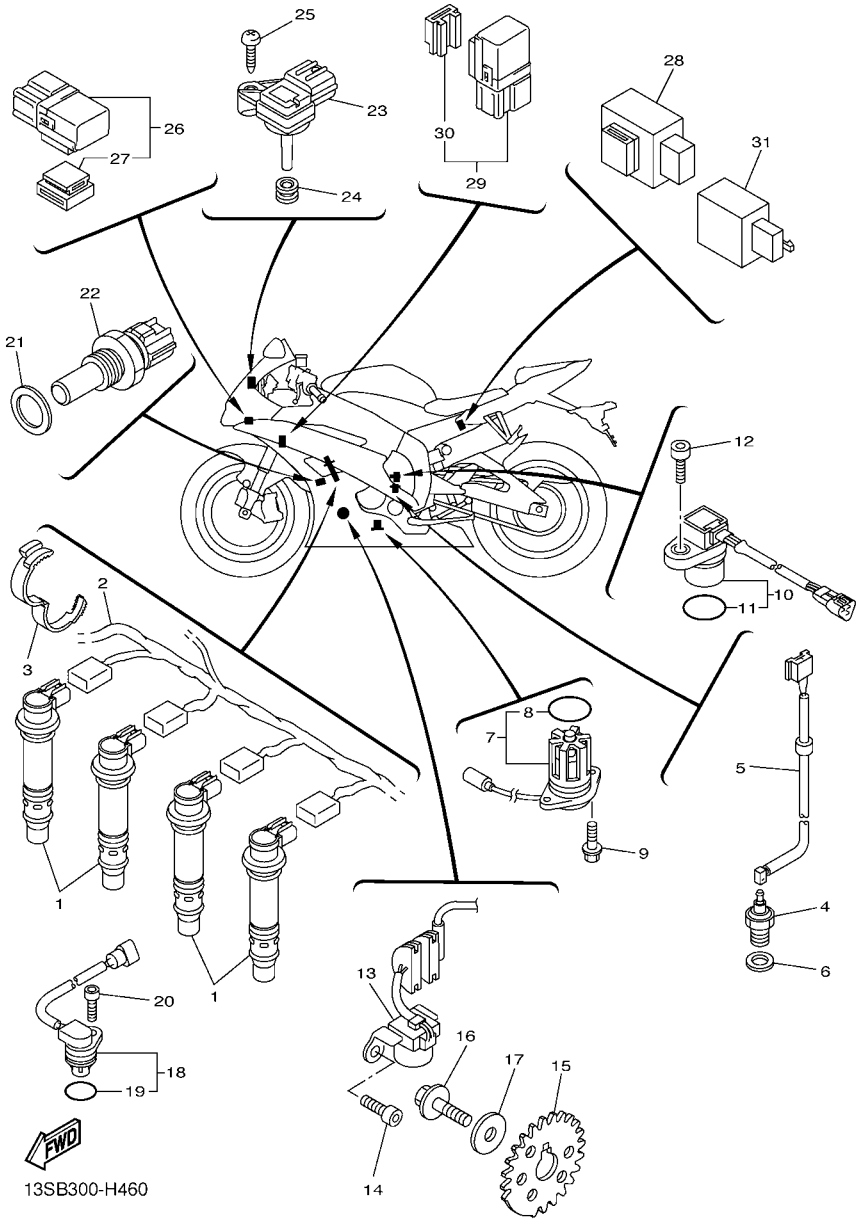

FIG. 46 ELECTRICAL 1

REF. NO.	PART NO.	DESCRIPTION	13SL	13SN				REMARKS
1	13S–82310–00	IGNITION COIL ASSY	4	4				
2	2C0–82309–00	WIRE, SUB LEAD	1	1				
3	90464–28003	CLAMP	1	1				
4	3GB–82540–01	NEUTRAL SWITCH ASSY	1	1				
5	2C0–82541–00	WIRE, LEAD	1	1				
6	90430–10148	GASKET	1	1				
7	5VX–85720–01	OIL LEVEL GAUGE ASSY	1	1				
8	5VY–8A8E0–00	.O-RING	1	1				
9	95022–06016	BOLT, FLANGE	2	2				
10	4WM–83755–02	SENSOR, SPEED	1	1				
11	4D9–81168–00	.O-RING	1	1				
12	91312–06016	BOLT	1	1				
13	2C0–81670–00	PICK-UP ASSY	1	1				
14	90110–06168	BOLT, HEXAGON SOCKET HEAD	2	2				
15	2C0–81673–01	ROTOR	1	1				
16	90105–08113	BOLT, FLANGE	1	1				
17	90201–08054	WASHER, PLATE	1	1				
18	5VY–85896–00	SENSOR, CAM POSITION	1	1				
19	4D9–81168–00	.O-RING	1	1				
20	90110–06175	BOLT, HEXAGON SOCKET HEAD	1	1				
21	90201–12790	WASHER, PLATE	1	1				
22	8CC–85790–01	THERMOSENSOR ASSY	1	1				
23	2C0–82380–00	SENSOR, PRESSURE	1	1				
24	90480–08006	GROMMET	1	1				
25	97702–50120	SCREW, TAPPING	1	1				
26	5JJ–81950–20	RELAY ASSY	2	2				
27	5JJ–81952–00	.HOLDER, RELAY	1	1				

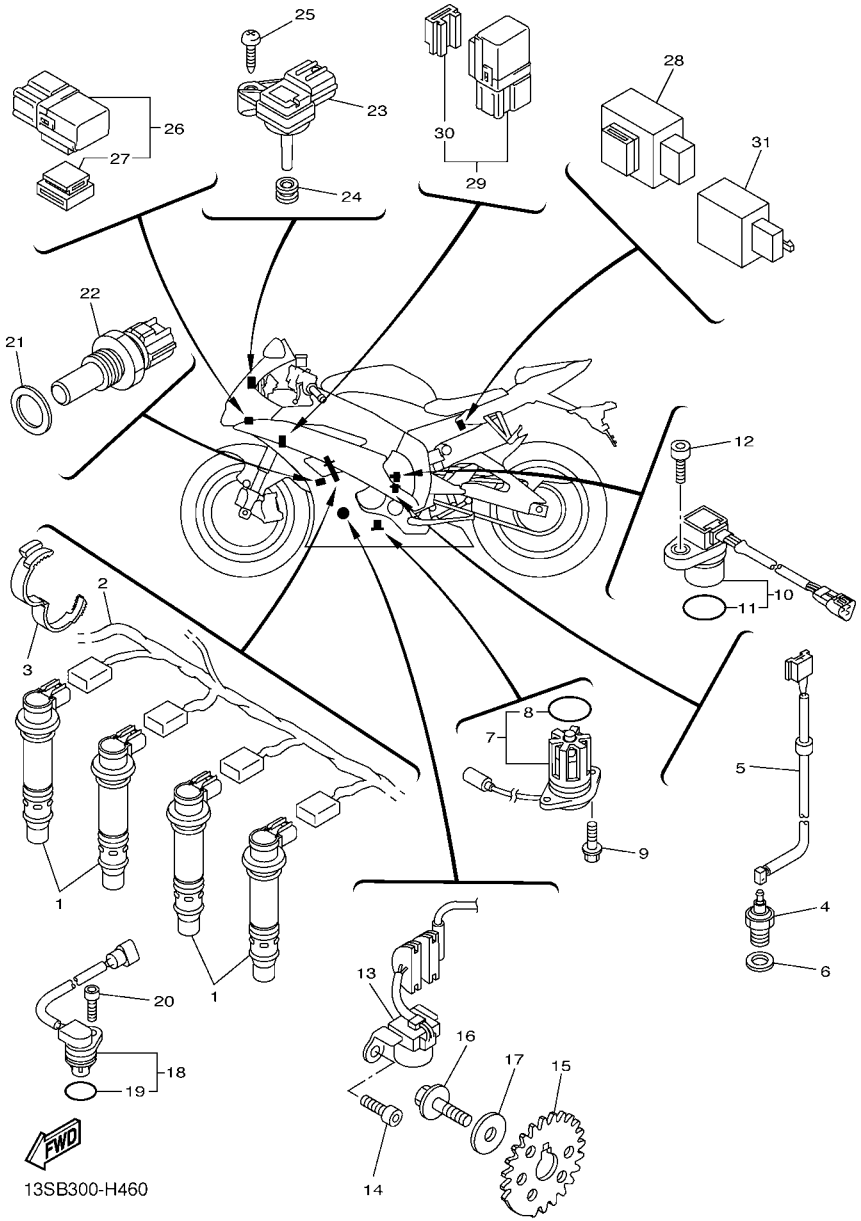

FIG. 46 ELECTRICAL 1

REF. NO.	PART NO.	DESCRIPTION	13SL	13SN				REMARKS
28	5VK–81950–40	RELAY ASSY	1	1				
29	5EA–81950–20	RELAY ASSY	1	1				
30	5EA–81952–00	.HOLDER, RELAY	1	1				
31	4GY–83350–00	FLASHER RELAY ASSY	1	1				

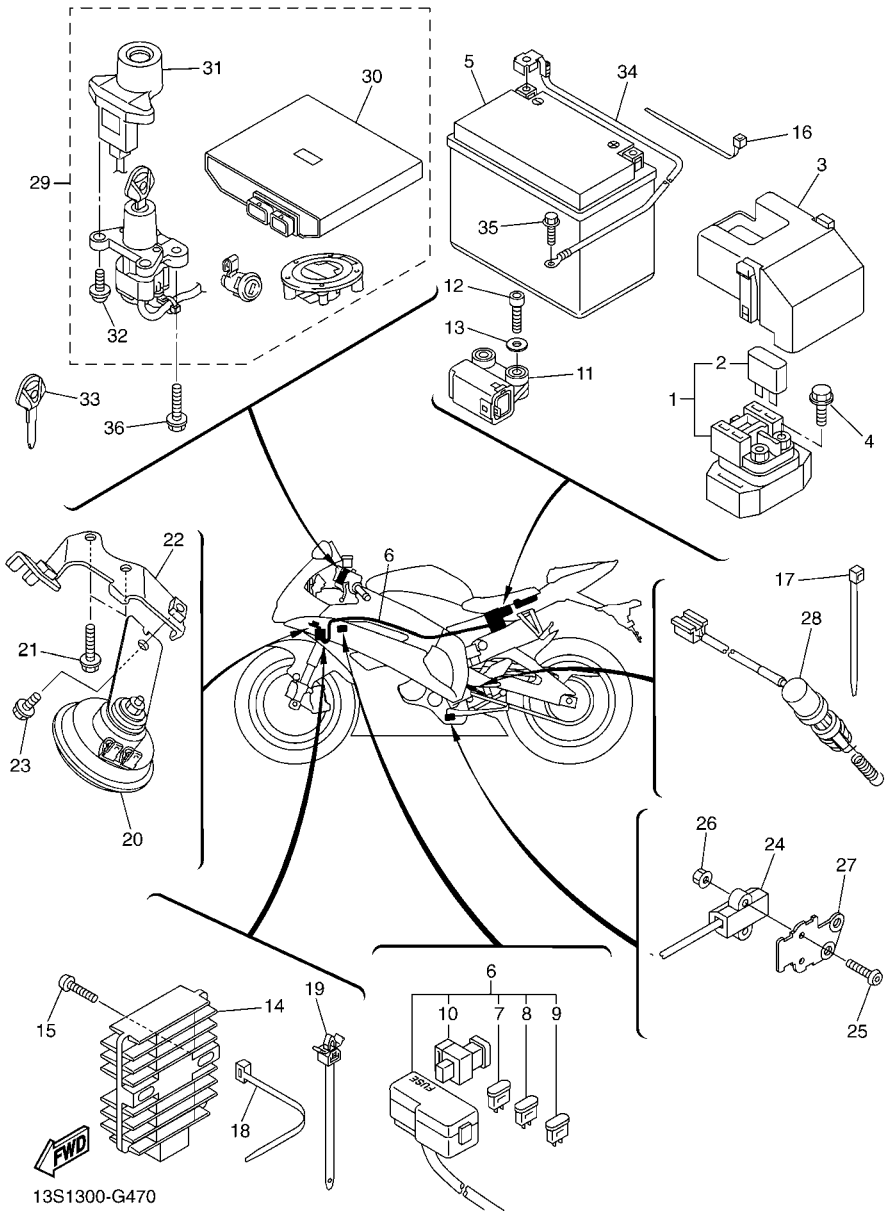

FIG. 47 ELECTRICAL 2

REF. NO.	PART NO.	DESCRIPTION	13SL	13SN				REMARKS
1	2C0–81940–00	STARTER RELAY ASSY	1	1				
2	36Y–82151–00	.FUSE (15A-BL)	2	2				
3	5SL–82119–10	COVER, LEAD WIRE	1	1				
4	95022–06008	BOLT, FLANGE	2	2				
5	5VY–82100–00	BATTERY ASSY (YUASA YTZ10S)	1	1				
6	13S–82590–00	WIRE HARNESS ASSY	1	1				
7	5JJ–82151–10	.FUSE (15A-BL)	5	5				
8	5JJ–82151–00	.FUSE (7.5A-BL)	4	4				
9	5JJ–82151–30	.FUSE (10A-BL)	2	2				
10	5JW–82151–10	.FUSE (50A)	1	1				
11	5PS–82576–01	SENSOR, LEAN ANGLE	1	1				
12	91317–04025	BOLT	2	2				
13	90201–042E0	WASHER, PLATE	2	2				
14	4XY–81960–00	RECTIFIER & REGULATOR ASSY	1	1				
15	92017–06025	BOLT, BUTTON HEAD	2	2				
16	90465–15011	CLAMP	2	2				
17	90464–32060	CLAMP	2	2				
18	90464–16061	CLAMP	4	4				
19	90464–12036	CLAMP	2	2				
20	4TH–83371–00	HORN	1	1				
21	95812–06012	BOLT, FLANGE	1	1				
22	13S–23377–00	BRACKET, HORN	1	1				
23	95822–06020	BOLT, FLANGE	2	2				
24	13S–82566–70	SWITCH, SIDE STAND	1	1				
25	92012–05025	BOLT, BUTTON HEAD	2	2				
26	95602–05200	NUT, SELF-LOCKING	2	2				
27	2C0–27961–00	BRACKET, SENSOR 1	1	1				

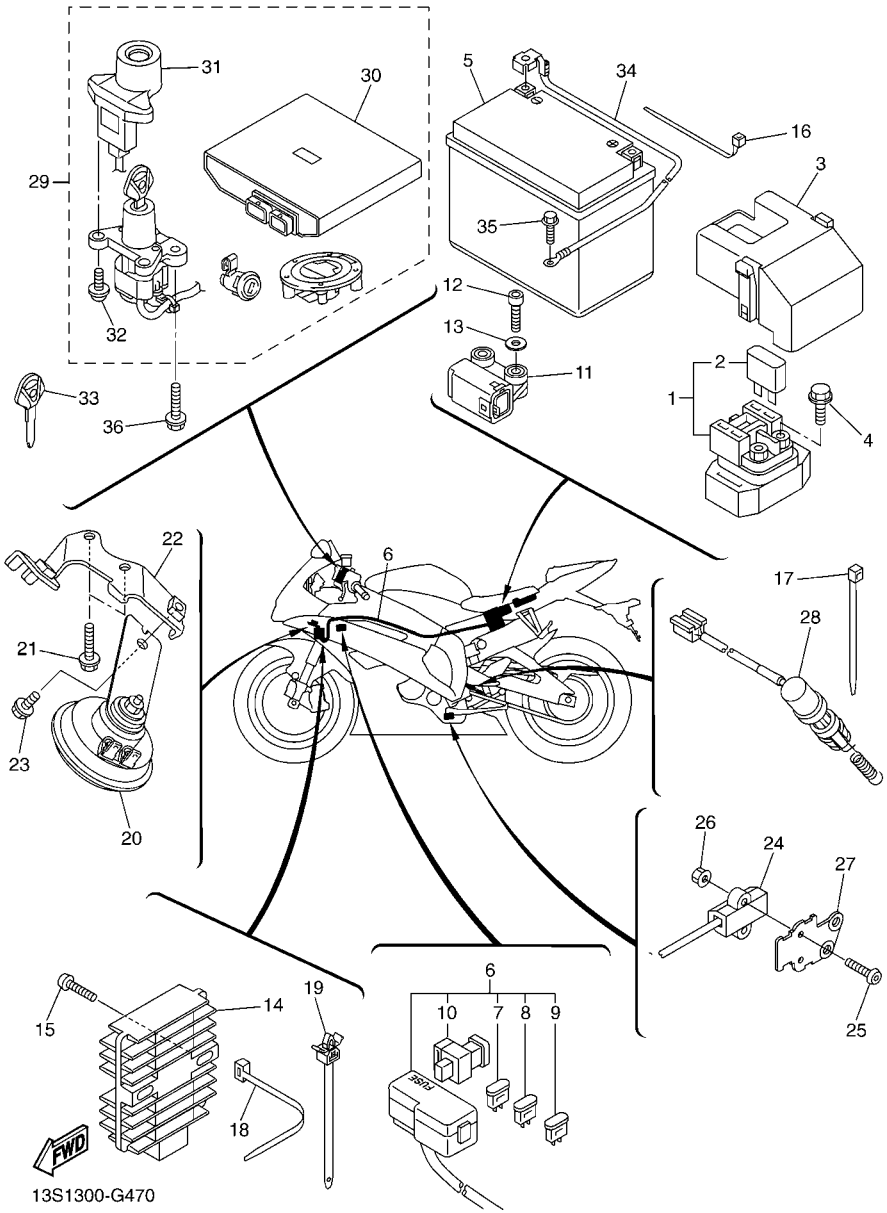

FIG. 47 ELECTRICAL 2

REF. NO.	PART NO.	DESCRIPTION	13SL	13SN				REMARKS
28	13S–82530–00	STOP SWITCH ASSY	1	1				
29	13S–W8250–B0	MAIN SW. IMMOBILIZER KIT	1					
	13S–W8250–C0	MAIN SW. IMMOBILIZER KIT		1				
30	13S–8591A–B0	.ENGINE CONTROL UNIT ASSY	1					
	13S–8591A–C0	.ENGINE CONTROL UNIT ASSY		1				
31	2C0–8255P–00	.IMMOBILIZER. UNIT COMP.	1	1				
32	5SL–82113–01	.SCREW	2	2				
33	5SL–82511–08	BLANK KEY	1	1				AP
34	2C0–82116–00	WIRE, MINUS LEAD	1	1				
35	91380–06012	BOLT	1	1				
36	90109–080G5	BOLT	2	2				

PART NO.	REF. NO.
2C0–11101–01	1 – 1
5VY–1111G–00	1 – 26
2C0–11133–11	1 – 2
2C0–11134–11	1 – 3
2C0–11165–00	13 – 20
2C0–11181–01	1 – 16
2C0–11191–00	1 – 18
2C0–11193–00	1 – 20
214–11198–01	8 – 11
13S–1133E–01	12 – 15
13S–1133F–01	12 – 16
2C0–11411–00	2 – 1
13S–11416–00	2 – 6
13S–11416–10	2 – 6
13S–11416–20	2 – 6
13S–11416–30	2 – 6
13S–11416–A0	2 – 6
2C0–11603–00	2 – 8
13S–11631–00	2 – 7
2C0–11633–00	2 – 9
13S–11650–01	2 – 2
2C0–11654–00	2 – 3
13S–11656–00	2 – 5
13S–11656–10	2 – 5
13S–11656–20	2 – 5
13S–11656–30	2 – 5
13S–12111–01	3 – 1
13S–12113–00	3 – 4
13S–12114–00	3 – 5
2C0–12116–00	3 – 3
13S–12117–00	3 – 6
1WG–12118–00	3 – 7
4SV–12119–00	3 – 8
2C0–12121–00	3 – 2
5EB–12153–09	3 – 10
5EB–12153–20	3 – 10
5EB–12153–30	3 – 10
1HX–12168–F0	3 – 9
1HX–12168–H1	3 – 9
1HX–12168–K1	3 – 9
1HX–12168–M1	3 – 9
1HX–12168–R1	3 – 9
1HX–12168–U1	3 – 9
1HX–12168–W1	3 – 9
1HX–12168–Y1	3 – 9
1HX–12169–11	3 – 9
1HX–12169–31	3 – 9
1HX–12169–50	3 – 9

PART NO.	REF. NO.
1HX–12169–70	3 – 9
1HX–12169–90	3 – 9
1HX–12169–E0	3 – 9
1HX–12169–G0	3 – 9
1HX–12169–J0	3 – 9
1HX–12169–L0	3 – 9
1HX–12169–N0	3 – 9
1HX–12169–T0	3 – 9
13S–12170–00	4 – 1
2C0–12176–00	4 – 3
13S–12180–00	4 – 2
13S–12210–00	4 – 6
2C0–12213–00	4 – 7
5BE–12241–00	1 – 19
2C0–12251–00	4 – 9
13S–12252–00	4 – 10
2C0–12405–00	6 – 11
2C0–12405–10	6 – 12
5SL–12410–00	6 – 1
2C0–12413–00	6 – 2
2C0–12420–00	5 – 1
2C0–12421–00	5 – 10
2C0–12428–01	5 – 11
2C0–12438–00	5 – 8
2C0–1243A–00	5 – 25
2C0–1243F–00	6 – 51
2C0–1244E–00	6 – 32
2C0–12450–00	5 – 9
13S–12461–00	6 – 10
5SL–12462–00	6 – 23
5EB–12469–00	5 – 23
5GV–1246E–00	6 – 9
2C0–1246H–00	6 – 60
2C0–12481–00	6 – 5
2C0–12491–00	6 – 44
2C0–12535–00	6 – 29
2C0–12551–00	6 – 37
2C0–12552–00	6 – 7
2C0–12576–00	5 – 14
2C0–12577–00	5 – 16
2C0–12578–00	6 – 4
2C0–12579–00	6 – 34
2C0–12581–00	5 – 15
2C0–12582–00	6 – 36
2C0–12588–00	5 – 18
2C0–12589–00	6 – 41
13S–12659–00	6 – 20
2C0–12659–00	6 – 14

PART NO.	REF. NO.
13S–12668–00	6 – 61
2C0–12668–00	6 – 15
13S–12669–00	6 – 30
5GJ–12675–00	6 – 13
13S–12678–00	6 – 21
13S–12679–00	20 – 35
2C0–12682–00	9 – 39
13S–12688–00	6 – 22
5EB–12822–00	8 – 2
5EB–13161–00	7 – 18
2C0–1316E–00	7 – 19
2C0–13300–00	7 – 1
4SV–13310–00	7 – 2
2C0–13400–00	8 – 9
2C0–13410–00	7 – 10
2C0–13414–01	8 – 12
2C0–13415–00	7 – 11
2C0–13416–00	7 – 15
5VX–13418–00	13 – 5
5GH–13440–20	8 – 5
13S–13470–00	8 – 1
5JW–13473–00	8 – 4
5EB–13475–00	8 – 3
2C0–13490–00	8 – 7
2C0–13532–00	10 – 24
68V–13533–00	10 – 23
8FP–13556–00	10 – 5
5VX–13569–01	44 – 11
2C0–13586–00	9 – 1
2C0–13596–00	9 – 2
13S–13750–00	10 – 1
13S–13761–00	9 – 27
2C0–13761–00	10 – 6
13S–13767–00	9 – 30
2C0–13881–00	9 – 5
2C0–13898–00	7 – 13
4C8–13907–01	27 – 26
13S–13930–00	10 – 2
13S–13938–00	9 – 25
13S–13971–01	10 – 27
2C0–14105–00	10 – 8
4KM–14137–00	10 – 18
8A7–14139–00	10 – 14
5PS–14147–00	9 – 28
	10 – 7
895–14169–00	10 – 13
2C0–14216–00	10 – 16
5FL–14216–00	10 – 9

PART NO.	REF. NO.
8CC–14216–10	10 – 19
3XV–14251–00	10 – 22
5FL–14348–10	10 – 25
2C0–14409–00	9 – 18
13S–1440B–00	9 – 22
13S–14411–00	9 – 6
13S–14421–10	9 – 24
2C0–14425–00	9 – 19
13S–14445–00	9 – 33
13S–14450–20	9 – 11
2C0–14452–00	9 – 32
13S–14457–00	9 – 8
13S–14462–00	9 – 7
2C0–14467–00	9 – 9
13S–1446R–00	9 – 35
13S–14490–00	9 – 20
13S–14498–00	9 – 15
13S–14610–20	12 – 1
4FM–14613–00	12 – 12
2C0–14618–00	12 – 5
2C0–14623–00	12 – 7
13S–14718–00	12 – 9
5JW–14723–00	11 – 4
	11 – 7
2C0–14725–00	12 – 6
2C0–14747–00	35 – 51
13S–14753–20	12 – 4
5VY–1482K–00	1 – 21
2C0–14840–00	11 – 1
2C0–14881–00	11 – 2
13S–14882–00	9 – 16
5SL–14890–00	1 – 22
5VY–14899–00	1 – 23
22U–14952–00	10 – 11
2C0–15100–01	13 – 1
5EB–15155–00	13 – 2
2C0–15163–00	17 – 12
13S–15189–00	13 – 8
36Y–15189–00	13 – 26
2C0–15362–00	13 – 28
3F9–15362–10	14 – 6
13S–15373–00	9 – 12
2C0–15377–00	13 – 30
1UF–15379–00	22 – 7
2C0–15411–01	14 – 1
2C0–15413–02	13 – 22
2C0–15416–00	14 – 12
2C0–15418–00	14 – 23

PART NO.	REF. NO.
2C0–15421–00	14 – 5
2C0–15441–00	14 – 22
2C0–15451–01	14 – 2
2C0–15456–01	14 – 15
2C0–15461–01	14 – 8
2C0–15462–01	13 – 23
2C0–15484–00	39 – 4
2C0–15512–00	15 – 1
2C0–15515–00	15 – 5
5MT–15521–00	15 – 2
2C0–15536–00	15 – 4
2C0–15580–00	15 – 3
2C0–16150–00	16 – 1
2C0–16154–00	16 – 2
1AE–16164–00	16 – 20
2C0–16164–00	16 – 19
4FN–16321–00	16 – 8
5SL–16321–00	16 – 6
5LV–16321–20	16 – 7
168–16324–00	16 – 10
	16 – 11
3J2–16324–00	16 – 9
	16 – 10
	16 – 11
168–16325–00	16 – 11
2C0–16340–00	16 – 30
132–16346–00	19 – 2
2C0–16351–00	16 – 13
2C0–16356–00	16 – 18
2C0–16360–00	16 – 4
2C0–16370–00	16 – 5
2C0–16377–00	16 – 23
2C0–16382–00	16 – 27
2C0–16384–00	16 – 16
13S–16539–00	16 – 17
13S–17121–00	17 – 11
13S–17131–00	17 – 6
13S–17151–00	17 – 3
2C0–17161–00	17 – 8
2C0–17211–00	17 – 31
13S–17221–00	17 – 20
2C0–17231–00	17 – 28
2C0–17241–00	17 – 25
13S–17251–00	17 – 29
2C0–17261–00	17 – 23
2C0–17411–00	17 – 1
2C0–17421–00	17 – 16
2C0–17460–00	17 – 33

PART NO.	REF. NO.
2C0–18101–00	19 – 4
2C0–18110–01	19 – 17
5PW–18112–00	19 – 15
5EB–18113–00	19 – 19
2C0–18115–00	19 – 22
5LV–18116–00	19 – 21
1D7–18127–00	19 – 3
2C0–18140–00	19 – 7
2C0–18144–00	19 – 1
2H9–18154–00	19 – 18
4XV–18154–00	19 – 20
2C0–18175–00	19 – 6
2C0–18511–00	18 – 3
2C0–18512–00	18 – 4
2C0–18513–00	18 – 5
2C0–18531–00	18 – 6
2C0–18535–00	18 – 7
2C0–18536–00	18 – 9
2C0–18540–00	18 – 1
136–18542–00	18 – 2
2C0–18562–00	18 – 10
13S–2110M–00	20 – 14
13S–21110–10	20 – 1
13S–2111D–00	20 – 27
13S–21131–00	21 – 40
2C0–2116J–00	12 – 18
2C0–2116K–00	35 – 53
2C0–2116L–00	35 – 54
5VY–2117K–01	28 – 15
13S–2117V–00–P0	38 – 1
13S–2117V–00–P1	38 – 1
13S–2117V–00–P3	38 – 1
13S–2117W–00–P0	38 – 12
13S–2117W–00–P1	38 – 12
13S–2117W–00–P3	38 – 12
13S–2118N–10	20 – 22
13S–21190–00	20 – 2
13S–21228–00	36 – 27
2C0–21249–00	11 – 5
2C0–21279–00	20 – 21
2C0–21339–00	27 – 14
2C0–21370–00	21 – 48
13S–21376–00	21 – 19
13S–2137K–00	38 – 50
13S–2137L–00	38 – 83
13S–2137U–00	38 – 49
13S–2137V–00	38 – 82
13S–21414–00	20 – 5

PART NO.	REF. NO.
13S–21424–00	20 – 6
13S–21435–00	20 – 12
13S–21445–00	12 – 30
13S–21446–00	12 – 28
13S–2144G–00	35 – 45
2C0–21485–00	35 – 24
2C0–21486–00	20 – 11
2C0–21511–00–P0	21 – 1
2C0–21511–00–P2	21 – 1
2C0–21511–00–P9	21 – 1
13S–2153E–60	38 – 98
13S–2153E–70	38 – 98
14B–2153E–80	38 – 26
	38 – 60
13S–21566–00	20 – 25
2C0–21566–00	20 – 23
	20 – 28
	27 – 21
13S–21567–00	20 – 26
2C0–21567–00	20 – 24
4C8–21568–01	27 – 70
13S–21575–00	21 – 35
13S–21611–00–P0	21 – 20
13S–21611–00–P1	21 – 20
13S–21611–00–P3	21 – 20
13S–21615–00	21 – 45
2C0–21629–00	21 – 53
13S–2162R–00–P0	21 – 29
13S–2162R–00–P2	21 – 29
13S–2162R–00–P3	21 – 29
13S–21639–00	22 – 15
4G0–21639–00	21 – 42
51Y–21639–00	21 – 8
	37 – 35
2C0–2163A–00	21 – 57
2C0–2163E–00	21 – 58
2C0–2163F–00	44 – 5
13S–21640–00	21 – 56
13S–21649–00	21 – 9
2C0–21650–00	23 – 27
13S–21652–00	21 – 17
14B–21668–00	23 – 37
13S–21669–00	21 – 25
13S–216A2–00	21 – 26
13S–216A3–00	21 – 27
13S–216A4–00	21 – 28
13S–21710–00–P0	22 – 1
13S–21710–00–P1	22 – 1

PART NO.	REF. NO.
13S–21710–00–P3	22 – 1
4D9–21717–00	21 – 24
13S–2171A–00–P0	27 – 38
13S–2171A–00–P1	27 – 38
13S–2171A–00–P2	27 – 38
13S–2171L–00	22 – 4
13S–21720–00–P0	22 – 13
13S–21720–00–P2	22 – 13
13S–21720–00–P3	22 – 13
13S–2172P–00	21 – 21
13S–21732–00	21 – 34
13S–21735–00	21 – 23
13S–2173M–00	44 – 3
13S–2173N–00	21 – 36
13S–2173P–00	21 – 22
13S–21746–00	20 – 29
2C0–21746–00	20 – 17
13S–2174X–00	20 – 15
5PW–2174X–00	22 – 2
2C0–2174Y–00	20 – 16
5VY–2176V–00	28 – 16
4J2–21778–00	22 – 17
2C0–2177F–00	12 – 17
2C0–21816–00	6 – 50
2C0–21823–00	14 – 19
26H–21828–00	6 – 49
2C0–21871–00	6 – 46
2C0–21875–00	6 – 48
13S–22110–00	23 – 1
2C0–22128–00	23 – 5
2C0–22141–10	23 – 38
2C0–22151–00	23 – 16
2C0–2217A–00	23 – 6
2C0–2217M–00	23 – 12
2C0–22184–00	23 – 2
13S–22210–12	24 – 1
13S–22210–92	24 – 1
13S–22219–00	24 – 4
2C0–22241–00	20 – 20
13S–22243–00	24 – 6
2C0–22252–00	23 – 42
2C0–22311–00	23 – 20
2C0–228A0–00	23 – 25
2C0–228B0–00	23 – 26
13S–23102–02	26 – 1
13S–23102–12	26 – 1
13S–23103–02	26 – 18
13S–23103–12	26 – 18

PART NO.	REF. NO.
13S–23106–00	26 – 3
	26 – 20
13S–23106–10	26 – 3
	26 – 20
13S–23110–02	26 – 2
13S–23111–00	26 – 9
	26 – 26
3VD–23115–00	26 – 4
	26 – 21
13S–23118–00	26 – 16
	26 – 33
13S–23120–02	26 – 19
13S–23141–00	26 – 14
	26 – 31
13S–23142–00	26 – 15
	26 – 32
2C0–23143–00	26 – 13
	26 – 30
3VD–23144–00	26 – 7
	26 – 24
5VU–23145–00	26 – 5
	26 – 22
3VD–23156–00	26 – 6
	26 – 23
13S–23170–00	26 – 8
	26 – 25
13S–2332N–00	26 – 12
	26 – 29
13S–23340–00	26 – 35
13S–23377–00	47 – 22
2C0–23389–00	25 – 8
13S–23393–00	26 – 11
	26 – 28
4XV–23415–01	25 – 2
4XV–23418–00	25 – 4
4XV–2341B–00	25 – 11
4XV–23434–00	33 – 4
	33 – 12
13S–23435–00	25 – 9
3FV–23462–00	26 – 38
2H9–23469–00	33 – 24
13S–23808–00	25 – 12
13S–24106–00	27 – 50
13S–24108–00	27 – 59
5PW–2411J–01	27 – 58
	27 – 67
13S–24135–00	27 – 28
2C0–24136–10	13 – 25

PART NO.	REF. NO.
5SL–2413B–00	27 – 3
2C0–2413Y–00	27 – 18
13S–24140–00	21 – 18
13S–24145–00	27 – 68
2C0–24145–00	27 – 69
4C8–2414H–00	27 – 51
	27 – 60
2C0–2414J–00	27 – 45
4C8–2414J–00	27 – 53
	27 – 62
2C0–2414N–00	27 – 47
2C0–2414P–00	27 – 52
	27 – 61
13S–24181–00	27 – 46
4FM–24181–00	12 – 2
5VY–24181–00	27 – 7
	27 – 12
2C0–24182–00	20 – 10
13S–24183–00	38 – 43
5SL–24183–00	27 – 19
5VY–24183–00	27 – 5
2C0–24184–00	27 – 54
	27 – 63
5VY–24191–00	27 – 6
5VY–24192–00	27 – 11
13S–24240–00	27 – 2
13S–24313–00	27 – 35
13S–24315–00	27 – 32
13S–24316–00	27 – 33
13S–24317–00	27 – 34
68V–24376–00	10 – 21
5JW–24486–00	27 – 30
13S–24491–00	27 – 27
5JJ–24602–00	27 – 23
5YT–24665–00	21 – 43
13S–24710–00	28 – 1
13S–24711–00	28 – 2
5SL–24723–00	28 – 5
13S–24725–00	28 – 10
13S–24750–00	28 – 4
2C0–24780–00	28 – 6
13S–2478E–00	28 – 13
2C0–24792–00	28 – 7
2C0–24825–00	28 – 9
13S–24847–00	28 – 11
13S–24854–00	27 – 39
4XV–25117–00	29 – 2
5SL–25168–00–0X	29 – 1

PART NO.	REF. NO.
5SL–25168–00–8L	29 – 1
2C0–25181–00	29 – 8
5PW–25188–00	29 – 9
4XV–25317–00	31 – 6
5SL–25338–00–0X	31 – 1
5SL–25338–00–8L	31 – 1
2C0–25364–00	31 – 8
5SL–25366–00	31 – 12
13S–25376–00	31 – 19
2C0–25379–00	31 – 23
2C0–25381–10	31 – 20
5SL–25383–00	31 – 7
2C0–25388–00	31 – 27
2C0–25389–00	31 – 28
5MT–25398–00	29 – 7
	31 – 11
5MT–25398–10	29 – 7
	31 – 11
5MT–25398–20	29 – 7
	31 – 11
2C0–25445–20	31 – 15
13S–2580T–00	30 – 3
13S–2580T–10	30 – 3
13S–2580U–00	30 – 14
13S–2580U–10	30 – 14
2C0–2580W–00	32 – 3
13S–2581T–00	30 – 1
5SL–25827–00	32 – 17
5SL–25827–10	32 – 18
5SL–25828–00	32 – 19
4ML–2582A–50	36 – 9
5SL–2582W–00	32 – 1
5SL–25838–00	32 – 7
5VY–2583B–00	30 – 13
	30 – 24
2C0–2583V–01	36 – 7
4PX–25852–00	36 – 14
5VY–25852–00	34 – 13
2VN–25854–00	36 – 15
5VY–25854–00	34 – 11
2VN–25855–00	36 – 16
5VY–25855–00	34 – 12
13S–2585H–00	20 – 3
5VS–2585H–00	34 – 9
2VN–25866–00	36 – 10
5VS–25867–00	34 – 16
5VS–2586F–00	34 – 6
13S–25872–00	34 – 20

PART NO.	REF. NO.
2C0–25874–00	36 – 24
2C0–25886–00	34 – 22
13S–25887–00	34 – 23
2C0–25894–00	36 – 13
5SL–25894–20	34 – 10
2C0–25895–00	36 – 18
3FV–2589A–00	36 – 12
13S–2589E–00	34 – 14
5VY–2589F–01	34 – 5
5VY–2589G–00	34 – 18
5VY–2589H–00	34 – 19
5SL–25914–00	32 – 9
5DH–25916–00	32 – 14
3JD–25917–00	32 – 11
5SL–25917–00	32 – 6
13S–25919–00	30 – 9
	30 – 20
5SL–25919–00	32 – 8
2C0–25921–00	32 – 10
4SV–25924–00	30 – 10
	30 – 21
8CR–25924–00	32 – 13
3GM–25925–00	30 – 11
	30 – 22
5SL–25926–00	32 – 15
5VY–25975–00	34 – 4
13S–26121–00	33 – 1
13S–26122–00	33 – 9
2C0–26240–00	33 – 15
2C0–26241–00	33 – 7
4XV–26246–00	33 – 2
	33 – 10
13S–26279–00	25 – 15
13S–26280–10	37 – 44
5VY–26281–00	33 – 18
2C0–26282–00	33 – 19
13S–26290–10	37 – 47
13S–26292–00	34 – 24
13S–26298–00	37 – 43
13S–26302–00	33 – 20
2C0–26326–00	36 – 30
5VS–26332–00	34 – 17
2C0–26335–00	33 – 8
2C0–27211–00	36 – 1
4XV–27222–01	36 – 19
2C0–27263–00	35 – 13
2C0–27311–00	35 – 1
2C0–27321–00	35 – 2

PART NO.	REF. NO.
2C0–27351–00	35 – 3
2C0–27414–00	35 – 17
2C0–27415–00	35 – 18
13S–27417–00	35 – 73
2C0–2741L–00	35 – 57
2C0–27420–00	35 – 37
2C0–2742L–00	35 – 65
5JJ–27431–00	35 – 56
4BP–27434–01	19 – 28
2C0–27435–00	35 – 30
	35 – 38
5JJ–27437–01	35 – 60
	35 – 68
5JJ–27441–00	35 – 64
2C0–27442–00	35 – 26
2C0–27443–00	35 – 36
2C0–27445–00	35 – 31
5GM–27445–00	21 – 32
13S–27446–00	35 – 41
2C0–27451–00	35 – 25
2C0–27453–00	35 – 16
2C0–27491–00	35 – 33
2C0–27961–00	47 – 27
2C0–28100–00	21 – 47
2C0–28110–00	21 – 49
4FM–28135–00	21 – 51
4XV–2814F–00	21 – 50
13S–28217–00	38 – 53
	38 – 86
2C0–28217–00	37 – 28
3P6–28217–00	37 – 5
13S–28219–00	38 – 37
13S–28227–00	37 – 6
2C0–28227–00	37 – 29
13S–28229–00	38 – 70
13S–28237–00	37 – 7
2C0–28237–00	22 – 6
13S–28328–60	38 – 36
13S–2832L–00	37 – 50
13S–2832L–B0	37 – 50
13S–28338–60	38 – 69
13S–2833A–00	20 – 30
13S–2833E–00	20 – 36
2C0–28342–01	37 – 27
13S–28356–00	37 – 24
13S–2835G–00–P0	37 – 12
13S–2835G–00–P1	37 – 12
13S–2835G–00–P3	37 – 12

PART NO.	REF. NO.
13S–2835H–00–P0	37 – 17
13S–2835H–00–P1	37 – 17
13S–2835H–00–P3	37 – 17
13S–28365–00–P0	37 – 10
13S–2836A–00	8 – 14
4KN–2836B–10	22 – 14
13S–2836E–00	8 – 15
13S–2836F–00	35 – 11
13S–2836G–00	38 – 79
13S–2836H–00	6 – 57
13S–2836K–00	37 – 4
13S–2836L–00	38 – 91
13S–2836M–00	38 – 94
13S–2836U–00	38 – 31
13S–28371–00	37 – 8
2C0–28371–00	37 – 36
13S–2837L–00	37 – 39
13S–2837M–00	37 – 41
13S–28381–00	37 – 1
13S–28385–00–P1	38 – 24
13S–28385–00–P3	38 – 24
13S–2838G–00	38 – 30
13S–2838R–00	37 – 30
13S–2838T–00	37 – 31
13S–28391–A0	38 – 36
13S–28391–B0	38 – 36
13S–28392–A0	38 – 69
13S–28392–B0	38 – 69
13S–28395–00–P1	38 – 58
13S–28395–00–P3	38 – 58
13S–283A1–A0	38 – 25
13S–283A2–A0	38 – 59
13S–28415–00	38 – 42
5SL–28416–00	22 – 8
2C0–28425–00	35 – 23
2C0–28428–00	35 – 19
2C0–28429–00	35 – 20
2C0–28455–00	37 – 15
	37 – 20
13S–2847R–00	38 – 65
13S–2848K–00	38 – 64
4D9–81168–00	46 – 11
	46 – 19
2C0–81410–00	39 – 6
2C0–81450–00	39 – 1
2C0–81670–00	46 – 13
2C0–81673–01	46 – 15
4WP–81801–00	40 – 3

PART NO.	REF. NO.
2C0–81815–00	40 – 7
4WP–81826–00	40 – 2
4XV–8182A–00	40 – 5
	40 – 8
4WP–81844–00	40 – 4
1FK–81847–00	40 – 6
2C0–81890–00	40 – 1
2C0–81940–00	47 – 1
5EA–81950–20	46 – 29
5JJ–81950–20	46 – 26
5VK–81950–40	46 – 28
5EA–81952–00	46 – 30
5JJ–81952–00	46 – 27
4XY–81960–00	47 – 14
5VY–82100–00	47 – 5
5SL–82113–01	47 – 32
2C0–82116–00	47 – 34
5SL–82119–10	47 – 3
13S–8212B–00	21 – 7
133–82131–00	21 – 10
36Y–82151–00	47 – 2
5JJ–82151–00	47 – 8
5JJ–82151–10	47 – 7
5JW–82151–10	47 – 10
5JJ–82151–30	47 – 9
13S–821A1–00	21 – 13
2C0–82309–00	46 – 2
13S–82310–00	46 – 1
13S–82318–00	9 – 31
2C0–82380–00	10 – 4
	46 – 23
13S–82386–00	10 – 20
5SL–82511–08	47 – 33
13S–82530–00	47 – 28
3GB–82540–01	46 – 4
2C0–82541–00	46 – 5
2C0–8255P–00	47 – 31
13S–82566–70	47 – 24
5PS–82576–01	47 – 11
2C0–8258J–00	20 – 19
13S–82590–00	47 – 6
3MA–82591–00	34 – 21
	45 – 12
2C0–82910–01	45 – 1
4XV–82917–01	45 – 6
2C0–83310–00	41 – 1
2C0–83311–00	41 – 2
	41 – 6

PART NO.	REF. NO.
2C0–83311–00	41 – 11
	41 – 15
2C0–83318–00	41 – 9
	41 – 18
2C0–83320–00	41 – 5
2C0–83330–00	41 – 10
2C0–8333A–00	41 – 3
	41 – 16
2C0–83340–00	41 – 14
2C0–8334A–00	41 – 7
	41 – 12
4GY–83350–00	46 – 31
4TH–83371–00	47 – 20
13S–83500–00	42 – 1
13S–83500–10	42 – 1
4XV–83513–00	37 – 25
5PW–8352S–00	42 – 4
5VY–8353E–00	42 – 2
5VY–83572–02	42 – 3
4WM–83755–02	46 – 10
5EB–83912–03	45 – 2
5JJ–83913–00	45 – 9
5SL–83922–10	34 – 7
2C0–83945–00	45 – 3
13S–83969–00	45 – 10
13S–83975–00	45 – 13
4HM–83980–00	34 – 8
13S–84301–00	43 – 1
13S–84303–00	43 – 4
4SV–84314–00	43 – 3
13S–84359–00	43 – 10
5SL–84397–00	43 – 5
13S–84710–00	44 – 1
4HC–84744–00	44 – 7
5VX–84745–01	44 – 6
5SL–84753–00	22 – 16
	44 – 2
3Y6–85130–02	21 – 54
5VX–85720–01	46 – 7
8CC–85790–01	46 – 22
2C0–85820–00	12 – 14
13S–85870–00	9 – 10
13S–85884–00	10 – 26
13S–85885–00	10 – 3
8FP–85886–00	37 – 33
5VY–85896–00	46 – 18
13S–8591A–B0	47 – 30
13S–8591A–C0	47 – 30

PART NO.	REF. NO.
13S–8592A–00	12 – 3
5VY–8A8E0–00	46 – 8
5VY–W0041–00	34 – 2
5XT–W0042–60	36 – 8
2C0–W0045–00	30 – 8
	30 – 19
5VX–W0046–00	32 – 12
5PW–W0047–00	30 – 7
	30 – 18
5SL–W0047–00	32 – 5
5PW–W0047–10	30 – 5
	30 – 16
1J3–W0048–00	30 – 12
	30 – 23
1UY–W0048–00	32 – 16
5VY–W0048–00	34 – 3
5PW–W0057–00	30 – 6
	30 – 17
5VY–W0057–00	32 – 4
5PW–W0057–10	30 – 4
	30 – 15
2C0–W1242–00	5 – 12
5VY–W2470–00	28 – 14
5SL–W2587–00	34 – 1
13S–W2838–00–P3	38 – 24
13S–W2839–00–P3	38 – 58
13S–W283U–10–P1	38 – 35
13S–W283U–13–P0	38 – 35
13S–W283U–50–P3	38 – 35
13S–W283V–10–P1	38 – 68
13S–W283V–13–P0	38 – 68
13S–W283V–50–P3	38 – 68
13S–W8250–B0	47 – 29
13S–W8250–C0	47 – 29
13S–Y2410–00–01	27 – 1
13S–YK241–00–P1	27 – 1
13S–YK241–00–P3	27 – 1
90101–06056	21 – 46
90101–08662	35 – 7
90105–05014	27 – 44
90105–06020	35 – 12
	38 – 81
90105–06027	1 – 4
90105–06040	6 – 24
90105–06041	34 – 29
90105–06082	5 – 24
90105–06083	40 – 9
90105–07004	4 – 4

PART NO.	REF. NO.
90105–08054	12 – 29
90105–08063	12 – 25
90105–08113	46 – 16
90105–08171	12 – 31
	20 – 13
90105–10017	24 – 2
90105–12228	20 – 7
90105–126A8	39 – 2
90105–14002	29 – 10
90109–06100	13 – 16
90109–06171	21 – 15
90109–06182	21 – 60
90109–06207	38 – 77
90109–06248	22 – 18
90109–066F0	1 – 25
	35 – 50
90109–080G5	47 – 36
90109–085G6	35 – 35
	35 – 52
90109–10017	23 – 32
90109–103A9	35 – 39
90109–12010	23 – 13
90109–12011	23 – 35
90110–05018	33 – 22
90110–05028	27 – 31
90110–05047	9 – 21
90110–05112	27 – 24
90110–06060	14 – 24
90110–06094	1 – 14
90110–06102	23 – 22
90110–06106	4 – 8
90110–06140	5 – 13
90110–06161	7 – 14
	7 – 17
	13 – 7
90110–06168	46 – 14
90110–06175	1 – 24
	46 – 20
90110–06182	18 – 11
90110–06233	27 – 40
90110–06258	28 – 3
90110–06323	14 – 10
90110–06324	14 – 11
90110–06326	8 – 13
	13 – 24
	14 – 4
	14 – 17
90110–06331	14 – 16

PART NO.	REF. NO.
90111–05003	22 – 9
	38 – 8
	38 – 20
	38 – 33
	38 – 46
	38 – 67
	38 – 74
90111–05021	37 – 40
	37 – 42
90111–05025	34 – 27
90111–05026	36 – 29
90111–06019	19 – 27
90111–06030	21 – 5
90111–06038	23 – 30
	37 – 26
90111–06040	38 – 11
	38 – 23
	38 – 32
	38 – 48
	38 – 66
90111–06041	34 – 28
90111–06043	21 – 2
90111–06051	28 – 8
90111–06063	38 – 10
	38 – 22
90111–06064	9 – 26
90111–06067	35 – 43
90111–06071	12 – 11
	27 – 22
90111–06099	12 – 10
90111–06104	21 – 44
90111–08065	35 – 22
90111–08066	35 – 72
90116–10025	13 – 10
90116–10026	13 – 11
90116–10485	31 – 16
90119–08083	13 – 12
90119–08084	13 – 13
90149–06043	30 – 2
90149–06080	39 – 7
90149–06082	13 – 9
	13 – 21
	39 – 5
90149–06233	35 – 32
	35 – 42
90149–08009	32 – 2
90150–05023	37 – 2
90151–06024	17 – 15

PART NO.	REF. NO.
90154–05012	27 – 29
90159–05035	9 – 23
90159–06024	16 – 15
90160–05006	42 – 5
	43 – 9
90170–08358	19 – 23
90170–28419	25 – 6
90176–06008	37 – 46
	37 – 49
90176–10075	1 – 13
90179–05523	27 – 48
	37 – 3
90179–06010	21 – 41
90179–06059	38 – 80
90179–07001	2 – 4
90179–08410	12 – 13
90179–10006	1 – 11
90179–12004	20 – 8
90179–20011	17 – 35
90179–30691	25 – 3
90183–04039	21 – 11
90183–05042	37 – 14
	37 – 19
90183–05061	44 – 9
90183–05074	27 – 43
90183–05076	20 – 33
	20 – 39
	22 – 3
	37 – 13
	37 – 18
	38 – 6
	38 – 17
	38 – 27
	38 – 41
	38 – 61
	38 – 72
90183–050A0	34 – 26
90183–05M02	38 – 40
	38 – 71
90183–06069	6 – 58
90185–05009	35 – 21
90185–10009	31 – 17
90185–12119	23 – 15
	23 – 36
90185–22002	23 – 39
90185–24007	31 – 21
90201–042E0	47 – 13
90201–06063	27 – 16

PART NO.	REF. NO.
90201–06071	6 – 28
90201–06380	35 – 49
90201–06M31	12 – 23
90201–08050	35 – 9
90201–08054	46 – 17
90201–08452	33 – 6
	33 – 14
90201–08784	19 – 29
90201–087G2	12 – 26
90201–10013	1 – 10
	1 – 12
90201–10021	31 – 18
90201–10029	16 – 31
90201–10035	35 – 6
90201–113K2	7 – 6
90201–12008	39 – 3
90201–12013	19 – 25
90201–12575	19 – 13
90201–12790	46 – 21
90201–127E1	19 – 10
90201–146F9	35 – 10
90201–177G4	19 – 8
90201–20023	17 – 34
90201–20278	17 – 37
90201–22014	23 – 40
90201–25020	31 – 22
90201–281U8	25 – 7
90201–33014	23 – 41
90202–05180	22 – 10
	38 – 9
	38 – 21
	38 – 34
	38 – 47
	38 – 75
90202–10024	38 – 78
90202–30235	25 – 5
90206–12074	19 – 26
90208–25002	16 – 3
90209–03274	43 – 7
90209–21332	17 – 4
90209–21351	17 – 10
90209–22352	17 – 9
90209–25011	17 – 21
90214–13002	35 – 40
90214–25003	17 – 27
90214–25004	17 – 26
90240–08084	35 – 28
90269–06001	21 – 30

PART NO.	REF. NO.
90269–06001	22 – 19
	44 – 4
90269–06002	38 – 93
	38 – 96
90269–06008	22 – 12
	35 – 34
	37 – 37
	37 – 38
	38 – 54
	38 – 87
	38 – 92
	38 – 95
	38 – 97
90269–06046	37 – 9
90269–06081	38 – 55
	38 – 88
90269–06083	6 – 62
90269–07001	25 – 14
90269–07007	6 – 31
	23 – 21
	38 – 45
	38 – 73
90269–07008	23 – 18
90269–07010	20 – 18
	21 – 16
	21 – 37
90269–07076	22 – 11
90338–06018	21 – 12
	21 – 31
	27 – 55
	27 – 64
90338–06134	38 – 7
	38 – 18
90338–15004	20 – 9
90340–14132	8 – 10
90340–18002	1 – 5
90340–32004	14 – 20
90387–05025	35 – 14
90387–05028	36 – 21
90387–05035	27 – 56
	27 – 65
90387–06022	23 – 28
90387–06023	35 – 47
90387–06048	20 – 32
	20 – 38
	25 – 13
90387–06055	27 – 20
90387–06057	21 – 4

PART NO.	REF. NO.
90387–06057	34 – 25
	38 – 5
	38 – 16
	38 – 29
	38 – 39
	38 – 63
90387–06143	27 – 10
90387–0614M	6 – 18
	6 – 27
90387–06203	27 – 42
90387–06215	35 – 44
90387–062X0	23 – 19
90387–063E6	12 – 21
90387–064T3	37 – 45
	37 – 48
90387–06681	6 – 47
90387–06697	35 – 63
	35 – 71
90387–066Y6	27 – 9
90387–067K8	38 – 3
	38 – 14
90387–07391	6 – 17
90387–08021	12 – 27
90387–1012B	23 – 33
90387–126Y1	23 – 11
90387–127W0	23 – 7
90387–21003	17 – 7
90387–21004	17 – 30
90387–22016	29 – 11
90387–25015	17 – 24
90387–25016	17 – 18
90387–25024	16 – 21
90387–250R3	17 – 2
90387–28011	17 – 19
90401–10012	30 – 25
90401–10172	34 – 30
	36 – 22
	36 – 25
90401–20145	8 – 6
90430–06014	5 – 5
90430–08119	1 – 8
90430–08143	14 – 14
90430–09002	9 – 29
90430–10005	34 – 31
	36 – 23
	36 – 26
90430–10148	46 – 6
90445–19002	35 – 5

PART NO.	REF. NO.
90446–15386	36 – 3
90450–22017	6 – 43
90450–32001	5 – 21
90450–35001	5 – 17
	6 – 6
	6 – 8
	6 – 35
	6 – 38
	6 – 39
90450–38003	5 – 20
90450–56007	9 – 4
90464–04001	33 – 21
90464–09M31	27 – 36
90464–10M38	6 – 56
90464–12036	47 – 19
90464–13004	21 – 14
90464–13073	21 – 38
90464–13249	36 – 28
90464–14228	21 – 59
90464–15157	33 – 16
90464–15195	33 – 17
90464–16005	10 – 28
90464–16011	23 – 24
90464–16012	23 – 23
	23 – 29
90464–16061	47 – 18
90464–20014	38 – 19
90464–28003	46 – 3
90464–32060	47 – 17
90464–47001	43 – 11
90465–08395	14 – 18
90465–10040	8 – 16
90465–13M11	21 – 52
90465–15011	47 – 16
90467–08003	6 – 52
	6 – 54
90467–09006	27 – 37
90467–10M04	6 – 53
90467–11090	5 – 26
90467–12085	36 – 17
90467–120A3	34 – 15
90467–14015	9 – 37
90467–15001	9 – 13
90467–180A0	11 – 6
90467–180A3	9 – 17
	9 – 38
90467–18172	11 – 3
90467–200A0	5 – 19

PART NO.	REF. NO.
90467–200A0	5 – 27
	6 – 42
90467–310A0	6 – 40
90468–16001	28 – 12
90480–01558	22 – 5
	38 – 52
	38 – 85
90480–01605	37 – 16
	37 – 21
90480–08005	21 – 33
90480–08006	46 – 24
90480–08264	9 – 14
	43 – 6
90480–10003	20 – 31
	20 – 37
90480–10542	27 – 8
	27 – 13
90480–11005	6 – 19
90480–11006	35 – 15
90480–12023	27 – 41
90480–12607	35 – 46
90480–12613	38 – 2
	38 – 13
90480–14003	21 – 3
	38 – 4
	38 – 15
	38 – 28
	38 – 38
	38 – 62
90480–14005	12 – 20
90480–15363	6 – 16
90501–080A2	18 – 8
90501–12743	35 – 58
	35 – 66
90501–220A2	16 – 14
90506–18008	35 – 4
90506–20193	36 – 2
90508–16052	16 – 33
90508–18134	35 – 27
90508–32020	19 – 5
91312–05010	27 – 25
91312–06016	9 – 3
	27 – 4
	46 – 12
91312–06020	6 – 3
91312–06025	7 – 5
	33 – 3
	33 – 11

PART NO.	REF. NO.
91312–06030	33 – 23
91312–06090	27 – 17
91314–06030	12 – 8
91314–06035	35 – 61
	35 – 69
91314–08030	25 – 10
	26 – 36
	33 – 5
	33 – 13
91314–08035	12 – 24
91314–08040	26 – 17
	26 – 34
91317–04025	47 – 12
91317–06035	6 – 26
91380–06012	47 – 35
91402–16012	36 – 6
91402–25015	35 – 29
91492–12010	10 – 12
91702–06018	36 – 4
91808–16023	1 – 6
91808–17032	7 – 7
92012–05025	47 – 25
92012–06016	23 – 17
92012–06020	9 – 34
92014–08014	14 – 13
92017–06016	35 – 48
92017–06025	47 – 15
92902–12600	23 – 14
	23 – 31
92907–06200	36 – 5
92907–08600	16 – 28
93101–10090	5 – 4
93102–12106	19 – 12
93102–15212	16 – 26
93102–35017	17 – 32
93106–28043	29 – 4
93106–40013	31 – 3
	31 – 14
93109–17071	23 – 10
93210–04092	13 – 3
93210–06667	7 – 21
93210–09165	7 – 20
	13 – 29
93210–14003	7 – 16
93210–14579	13 – 6
93210–15566	8 – 8
93210–15620	36 – 11
93210–16325	13 – 27

PART NO.	REF. NO.
93210–27194	14 – 7
93210–32172	14 – 21
93210–33133	5 – 7
93210–41N50	26 – 10
	26 – 27
93210–46001	5 – 22
93305–20509	17 – 17
93306–00006	5 – 3
93306–00106	16 – 12
	18 – 12
93306–07208	29 – 3
93306–20464	17 – 14
	17 – 38
93306–20531	31 – 2
	31 – 13
93306–20562	17 – 13
93310–340N8	16 – 22
93315–21570	16 – 25
93315–31758	23 – 9
93315–31759	23 – 8
93317–11096	16 – 24
93317–11295	19 – 11
93317–330A0	23 – 3
93317–330A1	23 – 4
93317–43580	31 – 4
93399–99932	25 – 1
93399–99957	26 – 37
93420–61M07	31 – 5
93440–25186	17 – 5
93440–28184	17 – 22
93440–52014	17 – 36
93450–16159	2 – 10
93501–04011	35 – 59
	35 – 67
93603–09106	7 – 4
93603–17070	7 – 3
93607–44002	4 – 11
93608–17263	14 – 9
93900–00030	29 – 6
	31 – 10
94112–17099	29 – 5
94112–17100	29 – 5
94118–17067	31 – 9
94118–17068	31 – 9
94580–25074	7 – 12
94582–21114	31 – 25
94591–64118	4 – 5
94682–21031	31 – 26

PART NO.	REF. NO.
94701–00402	1 – 15
95022–06008	47 – 4
95022–06016	46 – 9
95022–06030	27 – 15
95022–08012	1 – 7
95024–06012	35 – 55
95024–06025	5 – 6
95024–10040	20 – 4
95027–06020	45 – 5
95027–06025	12 – 19
95027–10020	6 – 45
95304–06700	19 – 24
95307–04700	10 – 10
95307–08700	36 – 20
95602–05200	21 – 55
	47 – 26
95602–10200	23 – 34
	24 – 3
	35 – 8
95602–14200	24 – 5
95604–06200	35 – 62
	35 – 70
95604–08200	31 – 24
95607–06200	45 – 4
95612–08625	1 – 9
95702–06500	21 – 6
95802–06014	6 – 55
	6 – 59
95802–06020	20 – 34
	20 – 40
95807–06035	6 – 25
95812–06012	47 – 21
95812–06030	7 – 8
	13 – 19
95812–06045	13 – 18
95812–06055	13 – 14
95812–06065	13 – 17
95812–06080	7 – 9
95812–08065	13 – 15
95822–06020	19 – 16
	47 – 23
95827–06012	6 – 33
95827–06014	12 – 22
97702–40010	41 – 4
	41 – 8
	41 – 13
	41 – 17
97702–40016	37 – 11

PART NO.	REF. NO.
97702–40016	37 – 32
	43 – 2
97702–50014	21 – 39
97702–50016	38 – 51
	38 – 84
97702–50020	38 – 57
	38 – 90
97702–50116	37 – 34
97702–50120	46 – 25
97706–04012	44 – 8
97707–40012	37 – 23
97707–50016	37 – 22
	38 – 44
	38 – 56
	38 – 76
	38 – 89
	43 – 8
	43 – 12
98507–04010	45 – 8
98507–05012	10 – 15
98507–05022	45 – 14
98507–05035	45 – 11
98507–06012	10 – 17
98707–03016	45 – 7
98902–05008	27 – 57
	27 – 66
98902–05014	27 – 49
	44 – 10
98902–05020	9 – 36
99001–07600	16 – 29
99001–10600	19 – 14
99009–10400	5 – 2
	16 – 32
99009–17400	19 – 9
99530–08012	14 – 3
99530–10014	13 – 4
99530–10114	1 – 17

PART NO.	REF. NO.