YAMAHA

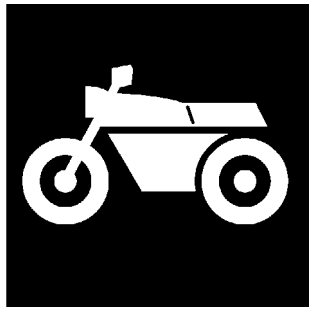

CATALOGO DE REPUESTOS

YZF-R6 (13S1) EUROPE

1G13S-352S1

(2G13S-352S1)

YAMAHA GENUINE Parts & Accessories

A2

YZF-R6
CATALOGO DE REPUESTOS
©2007 por Yamaha Motor Co., Ltd.
1ª edición, septiembre 2007
Todos los derechos reservados.
Toda reproducción o uso no autorizado
sin el consentimiento escrito de
Yamaha Motor Co., Ltd.
quedan expresamente prohibidos

A3

PROLOGO

Este catálogo de repuestos corresponde a las piezas para el o los modelos que figuran en la página de portada. Al formular el pedido de repuestos, se ruega citar este catálogo y especificar correctamente el número y el nombre de las piezas.

1. Las modificaciones y agregados que se hayan realizado después de la edición de este Catálogo de Repuestos, serán anunciados en las Informaciones de Recambios.
   Es recomendable que se hagan las correcciones necesarias en el Catálogo de Repuestos de acuerdo con las Informaciones de Recambios.

2. Abreviaciones
   En este. Catálogo de Repuestos se emplean las siguientes abreviaciones.

   "UR" Usar el número de partes especificado
   "UN" Usar la cantidad necesaria
   "AP" Piezas sustitutivas
   "LM" Fabricación local (Hay que pedir los repuestos en las cercanías)
   "F#" Nº de bastidor (Nº aplicable a la máquina)
   "O/S" Sobredimensionado

3. La cantidad de componentes para el montaje
   - Los componentes, suministrados como conjunto, se describen con un punto (.) que precede al nombre del parte como se indica a continuación.
   - La numeración que aparece a la derecha de cada descripción indica la cantidad de partes por cada unidad de conjunto.

CODIGO Nº	DESCRIPCION	CANT.	OBSERVACIONES
2F5–83310–60	ENSAMBLAJE DE LA LUZ	2	
115–83311–60	.BOMBILLA (6V–18W)	1	

4. Los colores de los componentes se indican como sigue en la columna de "OBSERVACIONES".

CODIGO Nº	DESCRIPCION	CANT.	OBSERVACIONES
2N4–24110–00–X5	COMP. DEL TANQUE	2	MXR
3J1–24240–10	.GRAFICO, DEL TANQUE	1	PARA MXR

5. Debe tenerse en cuenta que las ilustraciones sirven como guia para la búsqueda de los números de partes y no deben usarse para el montaje. Durante el montaje, se recomienda usar el manual de taller correspondiente.

6. EL asterisco (*) antes del número de referencia indica los elementos modificados después de la primera edición.

7. Números de serie

Nº de Serie del motor

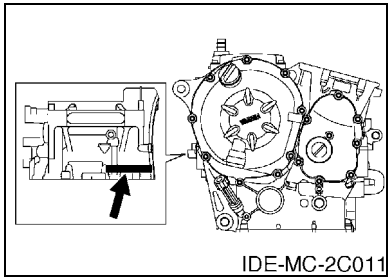

Nº de Serie del bastidor

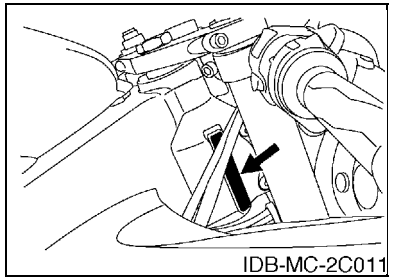

8. Códigos de color aplicables (El símbolo (*) muestra el color de modelo.)

Abreviatura	Nombre de color	Código de color
BWC1(*)	BLUISH WHITE COCKTAIL 1	0390
DNMG(*)	DARK GRAY METALLIC G	1086
DPBMC(*)	DEEP PURPLISH BLUE METALLIC C	0564
LGB	LOW GLOSS BLACK	0098
MBL2	MAT BLACK 2	0582
NG	NEBURA GOLD	008L
VRC1	VIVID RED COCKTAIL 1	0121

ROTULO DE MODELO

(1) El rótulo llamada “Rótulo de Modelo” está en la ubicación indicada abajo en el (3). Cuando se utilice este catálogo de repuestos, se ruega cotejar entre el “código de modelo–número de código de producción” del catálogo y el “código de modelo–número de código de producción” indicado en el Rótulo de Modelo fijado en el producto correspondiente.

(2) Indicación del “Rótulo de Modelo”

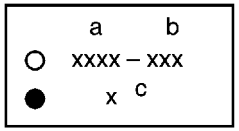

a: Código de tipo de Modelo

b: Número de código de Producción

c: Tipo de color

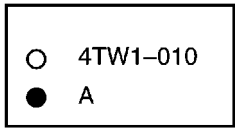

(3) Ubicación de fijación del Rótulo de Modelo

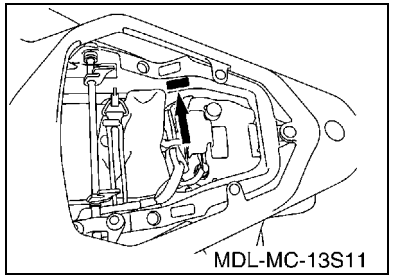

(4) Información de Color

Código de Modelo	Código de tipo de color	Código de color	Nombre de color	Abreviatura
13S1	A	0564	DEEP PURPLISH BLUE METALLIC C	DPBMC
	B	0390	BLUISH WHITE COCKTAIL 1	BWC1
	C	1086	DARK GRAY METALLIC G	DNMG

(5) Código de Modelo–Número de código de Producción del Modelo Listado en este Catálogo de Repuestos

Código de Modelo	Número de Código de Producción	País (destino)
13S1	010	EUROPE 1

CONTENIDO

MOTOR

CILINDRO B2
CIGUENAL & PISTON B3
VALVULA B4
ARBOL DE LEVAS & CADENA B6
BOMBA DE AGUA B7
RADIADOR & MANGUERA B8
BOMBA DE ACEITE B11
FILTRO ACEITE B12
ADMISION B13
ADMISION 2 ..... B15
SYSTEMA DE INDUCCION DE AIRE C3
DESCARGA C4
CARTER C6
CUBIERTA DE CARTER 1 ..... C8
ARRANQUE C9
EMBRAGUE C10
TRANSMISION C12
LEVA DE CAMBIO & HORQUILLA C14
EJE DE CAMBIO & PEDAL C15

SHASIS

CUADRO D3
GUARDABARRO D5
CUBIERTA LATERAL D8
BRAZO TRASERO D9
SUSPENSION TRASERO D11
DIRECCION D12
HORQUILLA DELANTERA D13
DEPOSITO DE COMBUSTIBLE D15
ASIENTO E4
RUEDA DELANTERA E5
CALIBRE FRENO DELANTERA E6
RUEDA TRASERA E7
CALIBRE FRENO TRASERA E9
MANILLAR & CABLE E10
CILINDRO MAESTRO DELANTERO E11
SOPORTE & APOYAPIE E13
CILINDRO MAESTRO TRASERO F2
BOVEDA 1 ..... F4
BOVEDA 2 ..... F7
GENERADOR F11
MOTOR DE ARRANQUE F12
LUZ DE DESTELLADOR F13
MEDIDOR F14
FARO DELANTERO F15
LUZ DE COLA G2
INTERRUPTOR DE MANILLAR&PALANC G3
EQUIPO ELECTRICO 1 ..... G4
EQUIPO ELECTRICO 2 ..... G6

INDICE

INDICE NUMERICO M1

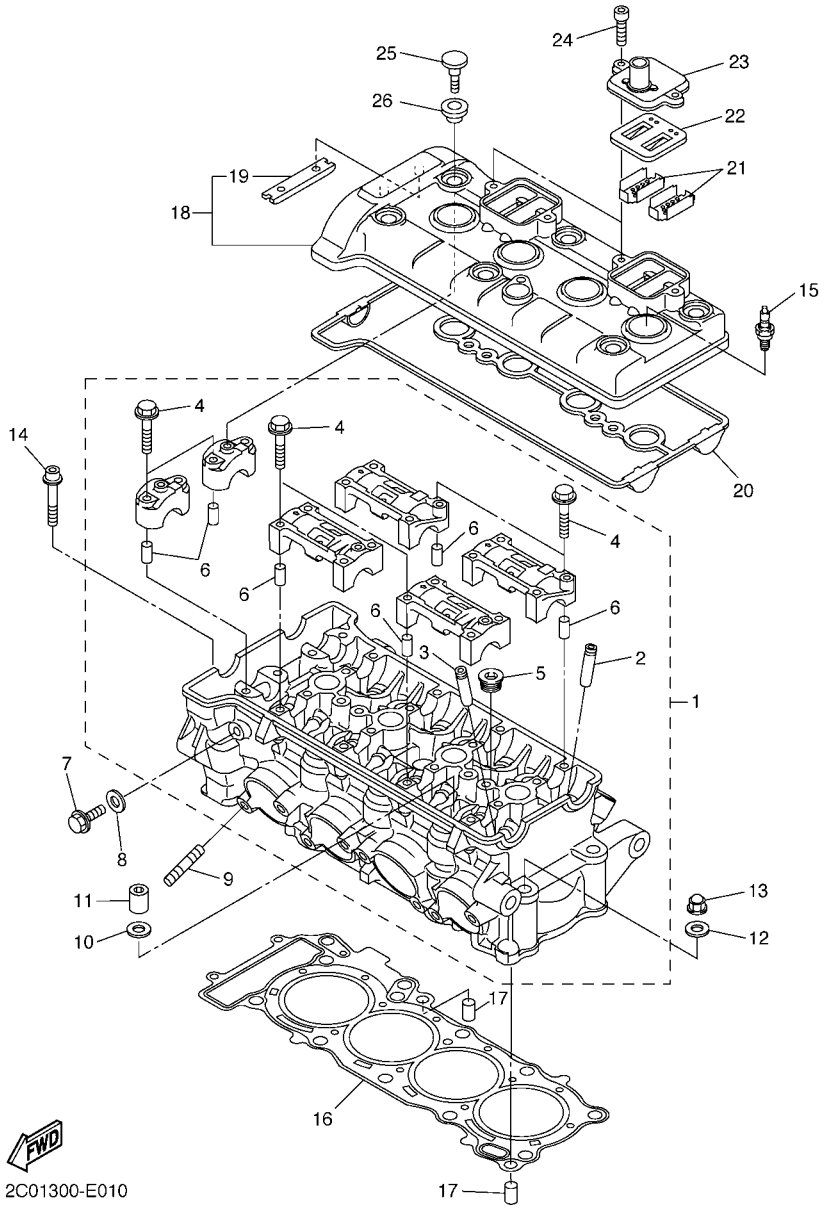

FIG. 1 CILINDRO

REF. Nº	CODIGO Nº	DESCRIPCION	13S1					OBSERVACIONES
1	2C0–11101–01	CULATA DE CILINDRO COMPLETA	1					
2	2C0–11133–11	.GUIA DE VALVULA 1	8					
3	2C0–11134–11	.GUIA DE VALVULA 2	8					
4	90105–06027	.TORNILLO	20					
5	90340–18002	.TORNILLO, DE DRENAJE	3					
6	91808–16023	.PASADOR DE CLAVIJA	12					
7	95022–08012	PERNO, DE BRIDA	1					
8	90430–08119	JUNTA	1					
9	95612–08625	TUERCA U	8					
10	90201–10013	ARANDELA PLANA	8					
11	90179–10006	TUERCA	8					
12	90201–10013	ARANDELA PLANA	2					
13	90176–10075	TUERCA CORONA	2					
14	90110–06094	TORNILLO ALLEN	2					
15	94701–00402	BUJIA (NGK CR10EK)	4					
16	2C0–11181–01	JUNTA, DE CULATA 1	1					
17	99530–10114	PASADOR, DE ESPIGA	2					
18	2C0–11191–00	TAPA CULATA DE CILINDRO 1	1					
19	5BE–12241–00	.TOPE DE GUIA 2	1					
20	2C0–11193–00	EMPAQUE	1					
21	5VY–1482K–00	PLACA	4					
22	5SL–14890–00	VALVULA DE LENGUETA COMPLETA	2					
23	5VY–14899–00	TAPA, DE CAJA	2					
24	90110–06175	TORNILLO ALLEN	4					
25	90109–066F0	PERNO	6					
26	5VY–1111G–00	CASQUILLO DE GOMA	6					

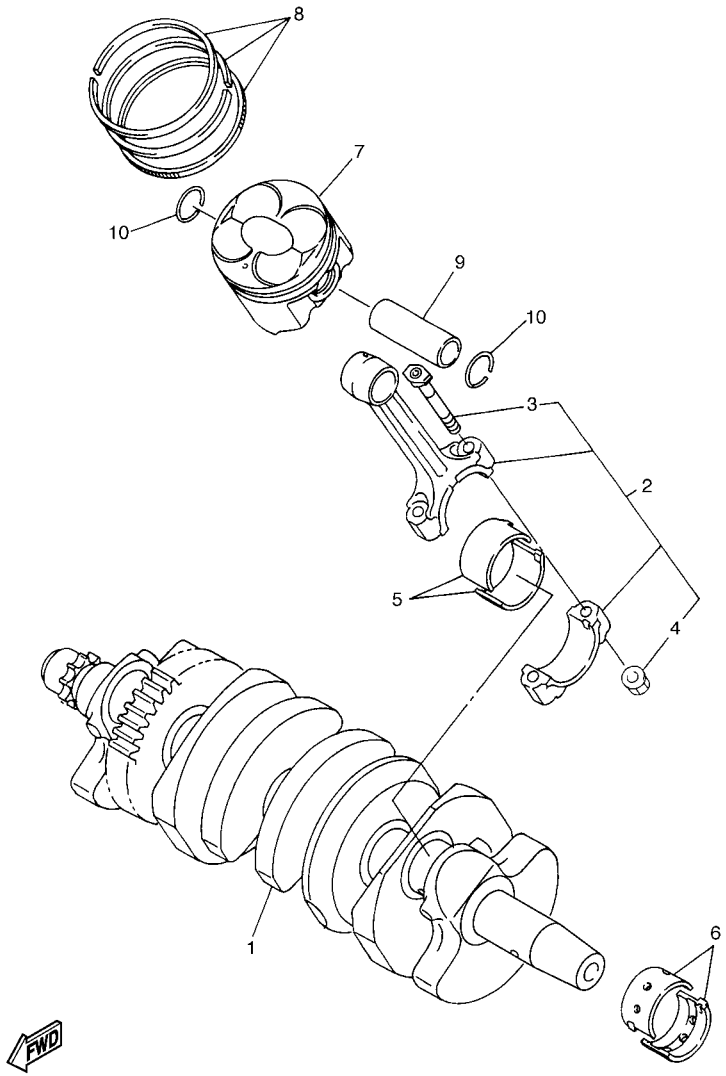

2C01300-E020

FIG. 2 CIGUENAL & PISTON

REF. Nº	CODIGO Nº	DESCRIPCION	13S1					OBSERVACIONES
1	2C0–11411–00	CIGUENAL	1					
2	13S–11650–00	BIELA COMPLETA	4					
3	2C0–11654–00	.TORNILLO DE BIELA	2					
4	90179–07001	.TUERCA	2					
5	13S–11656–00	COJINETE PLANO	8					UR AZUL
	13S–11656–10	COJINETE PLANO	8					UR NEGRO
	13S–11656–20	COJINETE PLANO	8					UR MARRON
	13S–11656–30	COJINETE PLANO	8					UR VERDE
6	13S–11416–A0	COJINETE PLANO 1	10					UR BLANCO
	13S–11416–00	COJINETE PLANO 1	10					UR AZUL
	13S–11416–10	COJINETE PLANO 1	10					UR NEGRO
	13S–11416–20	COJINETE PLANO 1	10					UR MARRON
	13S–11416–30	COJINETE PLANO 1	10					UR VERDE
7	13S–11631–00	PISTON (NORMA)	4					
8	2C0–11603–00	JUEGO DE ANILLOS (NORMA)	4					
9	2C0–11633–00	PASADOR, PISTON	4					
10	93450–16159	SEGURO	8					

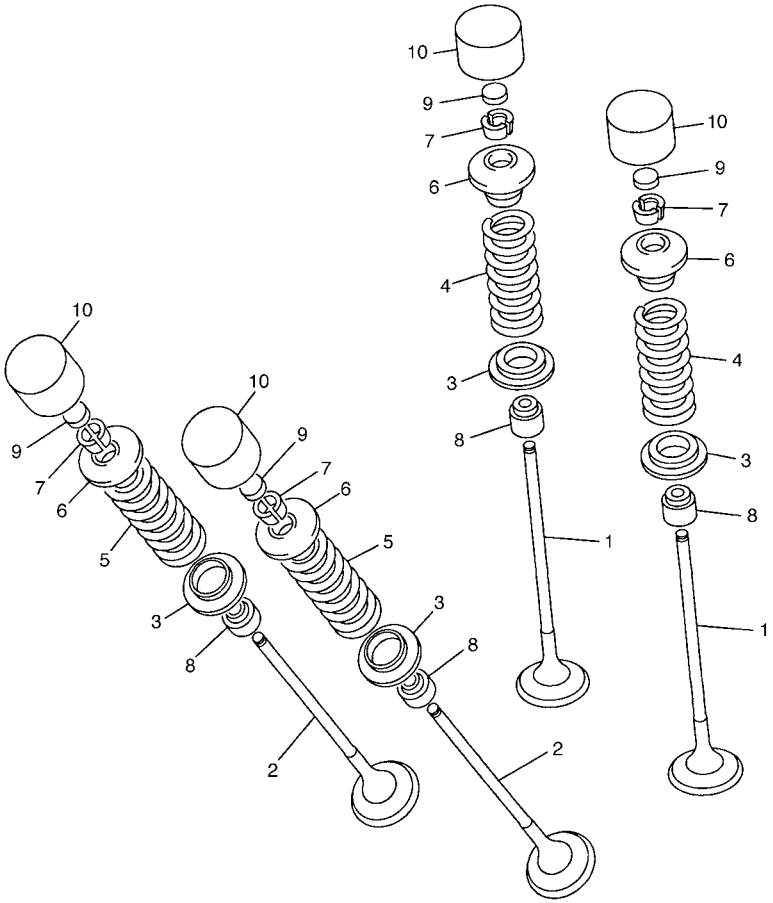

2C01300-E030

FIG. 3 VALVULA

REF. Nº	CODIGO Nº	DESCRIPCION	13S1					OBSERVACIONES
1	13S–12111–00	VALVULA DE ADMISION	8					
2	2C0–12121–00	VALVULA DE ESCAPE	8					
3	2C0–12116–00	ASIENTO RESORTE DE VALVULA	16					
4	13S–12113–00	RESORTE VALVULA INTERNA	8					
5	13S–12114–00	RESORTE VALVULA EXTERIOR	8					
6	13S–12117–00	RETEN RESORTE DE VALVULA	16					
7	1WG–12118–00	SEGURO DE VALVULA	32					
8	4SV–12119–00	SELLO DE ACEITE VALVULA	16					
9	1HX–12168–F0	COJIN, AJUSTADOR 2 (1.50)	16					UR
	1HX–12168–H1	COJIN, AJUSTADOR 2 (1.55)	16					UR
	1HX–12168–K1	COJIN, AJUSTADOR 2 (1.60)	16					UR
	1HX–12168–M1	COJIN, AJUSTADOR 2 (1.65)	16					UR
	1HX–12168–R1	COJIN, AJUSTADOR 2 (1.70)	16					UR
	1HX–12168–U1	COJIN, AJUSTADOR 2 (1.75)	16					UR
	1HX–12168–W1	COJIN, AJUSTADOR 2 (1.80)	16					UR
	1HX–12168–Y1	COJIN, AJUSTADOR 2 (1.85)	16					UR
	1HX–12169–11	COJIN, AJUSTADOR 2 (1.90)	16					UR
	1HX–12169–31	COJIN, AJUSTADOR 2 (1.95)	16					UR
	1HX–12169–50	COJIN, AJUSTADOR 2 (2.00)	16					UR
	1HX–12169–70	COJIN, AJUSTADOR 2 (2.05)	16					UR
	1HX–12169–90	COJIN, AJUSTADOR 2 (2.10)	16					UR
	1HX–12169–E0	COJIN, AJUSTADOR 2 (2.15)	16					UR
	1HX–12169–G0	COJIN, AJUSTADOR 2 (2.20)	16					UR
	1HX–12169–J0	COJIN, AJUSTADOR 2 (2.25)	16					UR
	1HX–12169–L0	COJIN, AJUSTADOR 2 (2.30)	16					UR
	1HX–12169–N0	COJIN, AJUSTADOR 2 (2.35)	16					UR
	1HX–12169–T0	COJIN, AJUSTADOR 2 (2.40)	16					UR

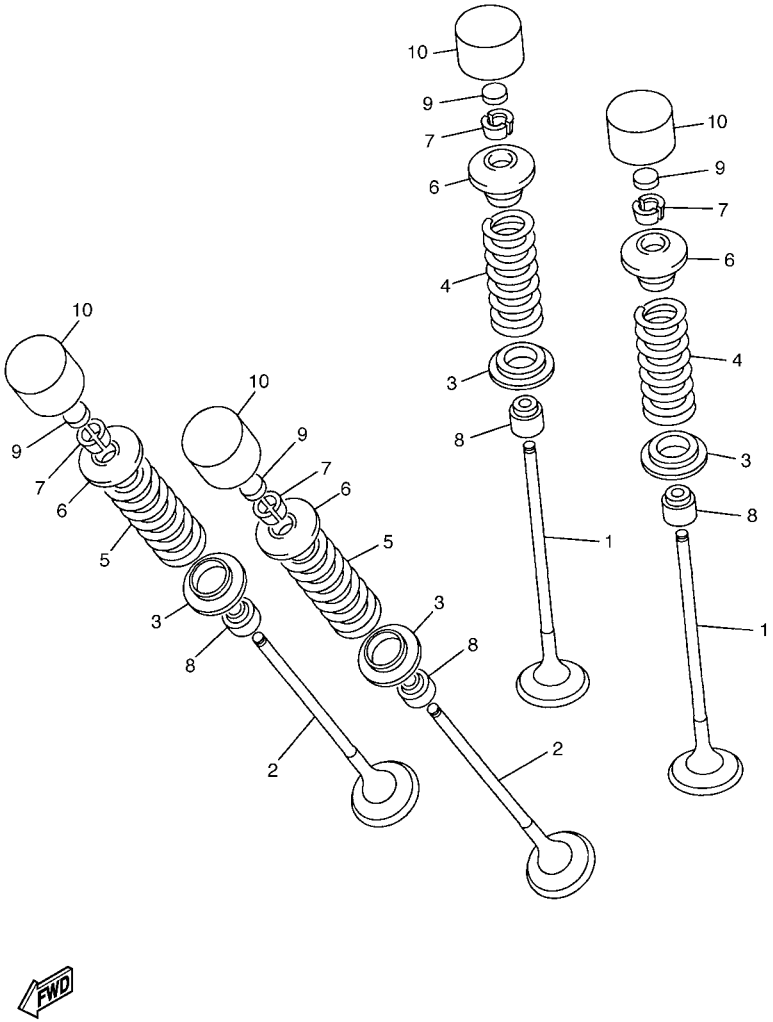

2C01300-E030

FIG. 3 VALVULA

REF. Nº	CODIGO Nº	DESCRIPCION	13S1					OBSERVACIONES
10	5EB–12153–20	LEVANTADOR DE VALVULA	16					UR AZUL
	5EB–12153–30	LEVANTADOR DE VALVULA	16					UR ROJO
	5EB–12153–09	LEVANTADOR DE VALVULA (O/S)	16					AP VERDE

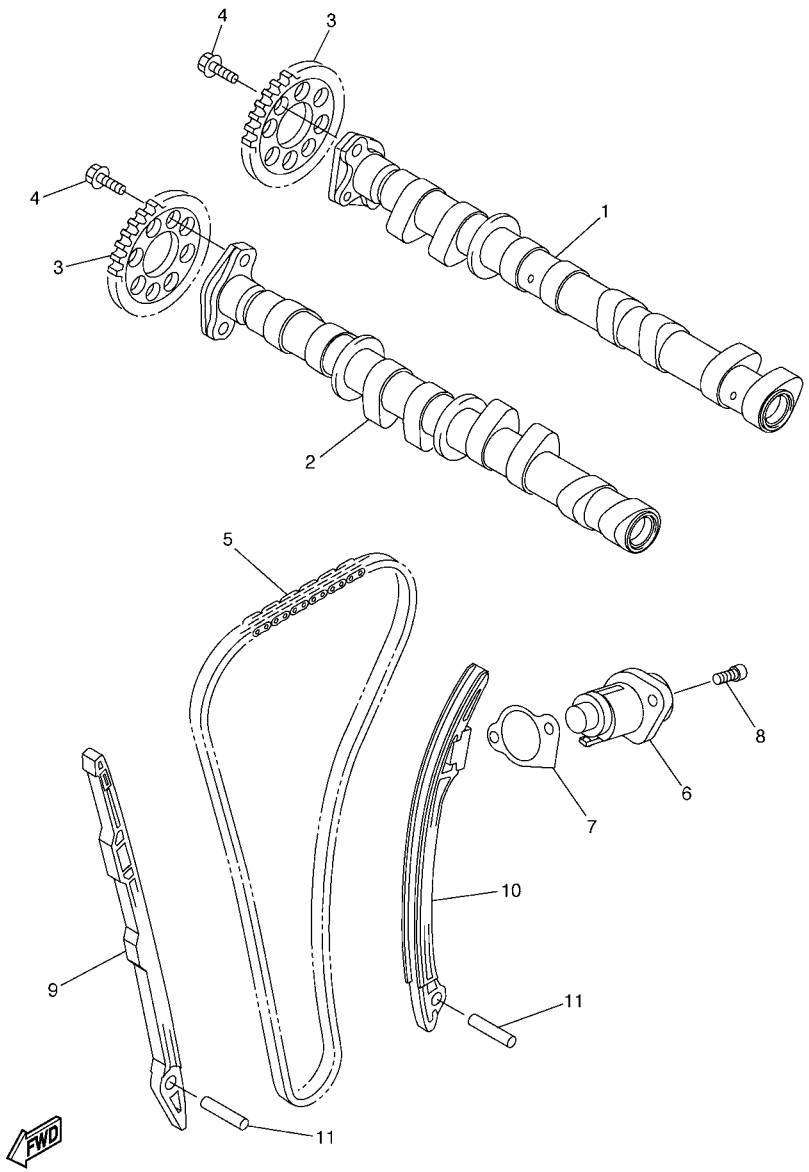

2C01300-E040

FIG. 4 ARBOL DE LEVAS & CADENA

REF. Nº	CODIGO Nº	DESCRIPCION	13S1					OBSERVACIONES
1	13S–12170–00	ARBOL DE LEVAS COMPLETO 1	1					
2	13S–12180–00	ARBOL DE LEVAS COMPLETO 2	1					
3	2C0–12176–00	CATALINA DE CADENA	2					
4	90105–07004	TORNILLO	4					
5	94591–64118	CADENA	1					
6	13S–12210–00	TENSOR CADENA DE LEVA	1					
7	2C0–12213–00	EMPAQUE DE CAJA TENSOR	1					
8	90110–06106	TORNILLO ALLEN	2					
9	2C0–12251–00	AMORTIGUADOR CADENA 1	1					
10	13S–12252–00	AMORTIGUADOR CADENA 2	1					
11	93607–44002	PASADOR DE CLAVIJA	2					

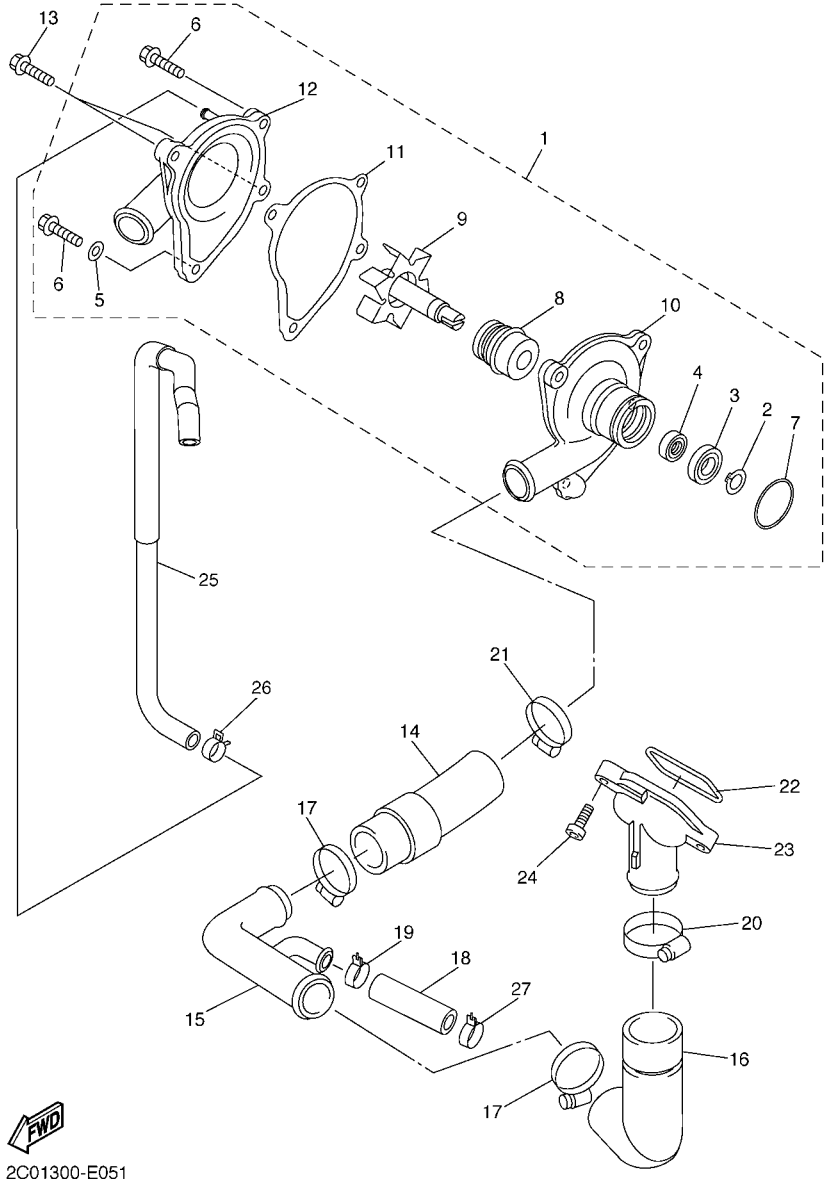

FIG. 5 BOMBA DE AGUA

REF. Nº	CODIGO Nº	DESCRIPCION	13S1					OBSERVACIONES
1	2C0–12420–00	BOMBA DE AGUA COMPLETA	1					
2	99009–10400	.PRESILLA REDONDA	1					
3	93306–00006	.COJINETE	1					
4	93101–10090	.SELLO ACEITE	1					
5	90430–06014	.JUNTA	1					
6	95024–06025	.PERNO, DE BRIDA	2					
7	93210–33133	.ANILLO O	1					
8	2C0–12438–00	.SELLO MECANICO	1					
9	2C0–12450–00	.EJE IMPULSOR COMPLETO	1					
10	2C0–12421–00	.CAJA DE BOMBA DE AGUA	1					
11	2C0–12428–01	.JUNTA, DE CBTA.CAJA 2	1					
12	2C0–W1242–00	.CUBIERTA DE CAJA	1					
13	90110–06140	TORNILLO ALLEN	2					
14	2C0–12576–00	MANGUERA 1	1					
15	2C0–12581–00	CONEXION	1					
16	2C0–12577–00	MANGUERA 2	1					
17	90450–35001	BRIDA, MANGUERA	2					
18	2C0–12588–00	MANGUERA 5	1					
19	90467–200A0	PRESILLA	1					
20	90450–38002	BRIDA, MANGUERA	1					
21	90450–32001	BRIDA, MANGUERA	1					
22	93210–46001	ANILLO O	1					
23	5EB–12469–00	CONDUCTO	1					
24	90105–06082	TORNILLO	2					
25	2C0–1243A–00	TUBO 1	1					
26	90467–11090	PRESILLA	2					
27	90467–200A0	PRESILLA	1					

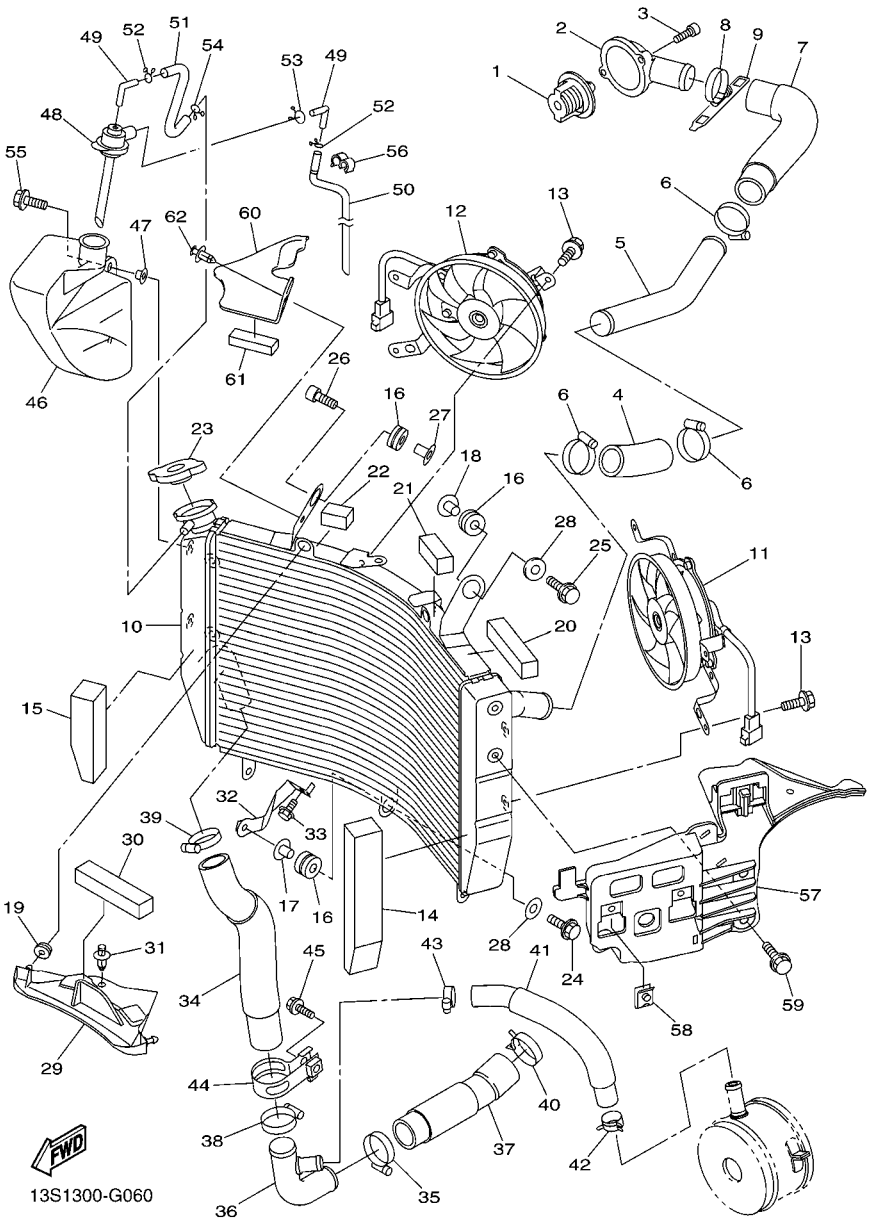

FIG. 6 RADIADOR & MANGUERA

REF. Nº	CODIGO Nº	DESCRIPCION	13S1					OBSERVACIONES
1	5SL–12410–00	TERMOSTATO CONJUNTO	1					
2	2C0–12413–00	CUBIERTA TERMOSTATO	1					
3	91312–06020	TORNILLO	2					
4	2C0–12578–00	MANGUERA 3	1					
5	2C0–12481–00	TUBO 1	1					
6	90450–35001	BRIDA, MANGUERA	3					
7	2C0–12552–00	MANGUERA 8	1					
8	90450–35001	BRIDA, MANGUERA	1					
9	5GV–1246E–00	CUBIERTA 2	1					
10	13S–12461–00	RADIADOR COMPLETO	1					
11	2C0–12405–00	COMPRESOR	1					
12	2C0–12405–10	COMPRESOR	1					
13	5GJ–12675–00	PERNO, SUJECION VENTILADOR	6					
14	2C0–12659–00	AMORTIGUADOR DE CUBIERTA 2	1					
15	2C0–12668–00	AMORTIGUADOR DE CUBIERTA 3	1					
16	90480–15363	TAPON	3					
17	90387–07391	ESPACIADOR	1					
18	90387–0614M	ESPACIADOR	1					
19	90480–11005	TAPON	2					
20	13S–12659–00	AMORTIGUADOR DE CUBIERTA 2	1					
21	13S–12678–00	AMORTIGUADOR DE CUBIERTA 5	1					
22	13S–12688–00	AMORTIGUADOR DE CUBIERTA 7	1					
23	5SL–12462–00	TAPON, DEL RADIADOR	1					
24	90105–06040	TORNILLO	1					
25	95807–06035	TORNILLO	1					
26	91317–06035	PERNO	1					
27	90387–0614M	ESPACIADOR	1					

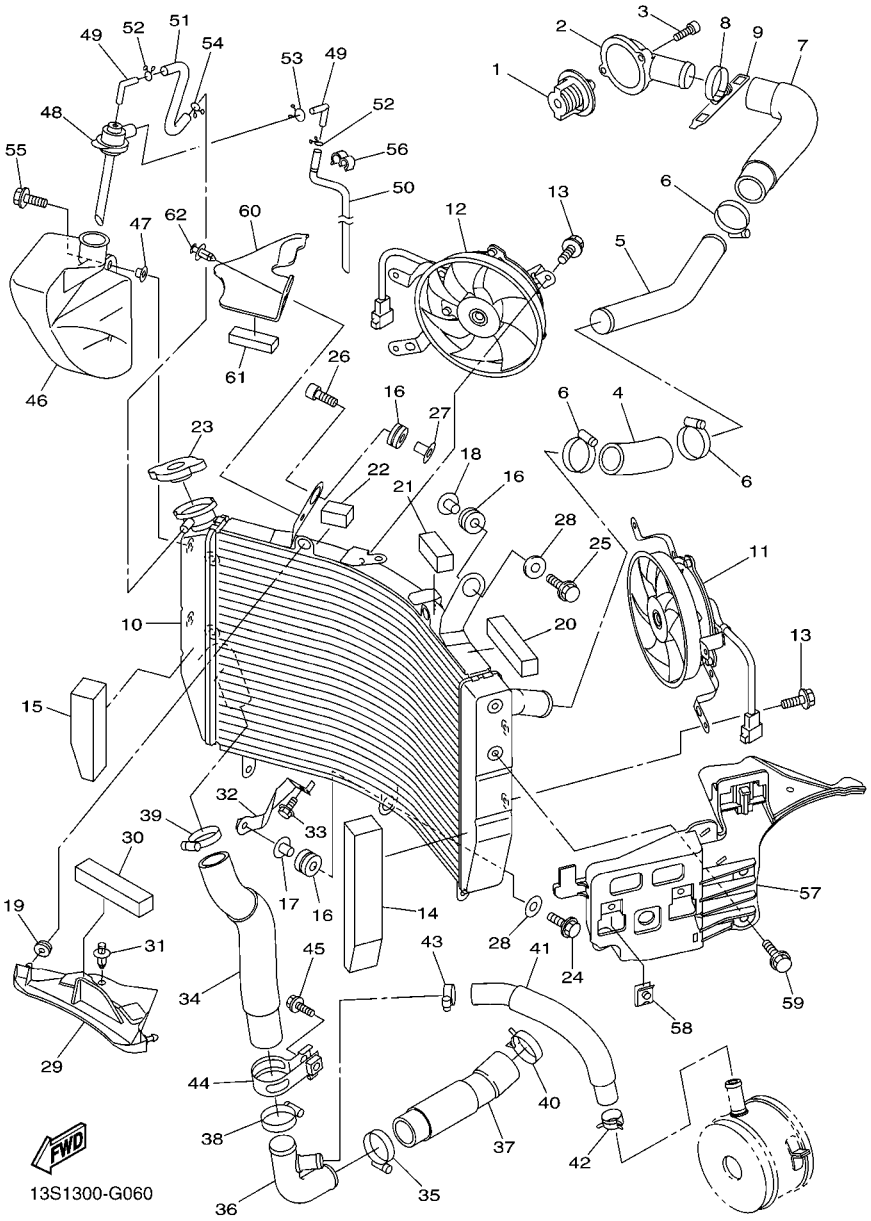

FIG. 6 RADIADOR & MANGUERA

REF. Nº	CODIGO Nº	DESCRIPCION	13S1					OBSERVACIONES
28	90201–06071	ARANDELA PLANA	2					
29	2C0–12535–00	EMPAQUETADURA	1					
30	13S–12669–00	AMORTIGUADOR DE CUBIERTA 4	1					
31	90269–07007	REMACHE	1					
32	2C0–1244E–00	SOPORTE 1	1					
33	95827–06012	TORNILLO	1					
34	2C0–12579–00	MANGUERA 4	1					
35	90450–35001	BRIDA, MANGUERA	1					
36	2C0–12582–00	CONEXION	1					
37	2C0–12551–00	55 PLACA	1					
38	90450–35001	BRIDA, MANGUERA	1					
39	90450–35001	BRIDA, MANGUERA	1					
40	90467–310A0	PRESILLA	1					
41	2C0–12589–00	MANGUERA 6	1					
42	90467–200A0	PRESILLA	1					
43	90450–22017	BRIDA, MANGUERA	1					
44	2C0–12491–00	GRAMPA 1	1					
45	95027–10020	PERNO, DE BRIDA	1					
46	2C0–21871–00	TANQUE DE RECUPERACION	1					
47	90387–06681	ESPACIADOR	2					
48	2C0–21875–00	TAPA	1					
49	26H–21828–00	CODO	2					
50	2C0–21816–00	TUBO 1	1					
51	2C0–1243F–00	MANGUERA 3	1					
52	90467–08003	PRESILLA	2					
53	90467–10M04	PRESILLA	1					
54	90467–08003	PRESILLA	1					

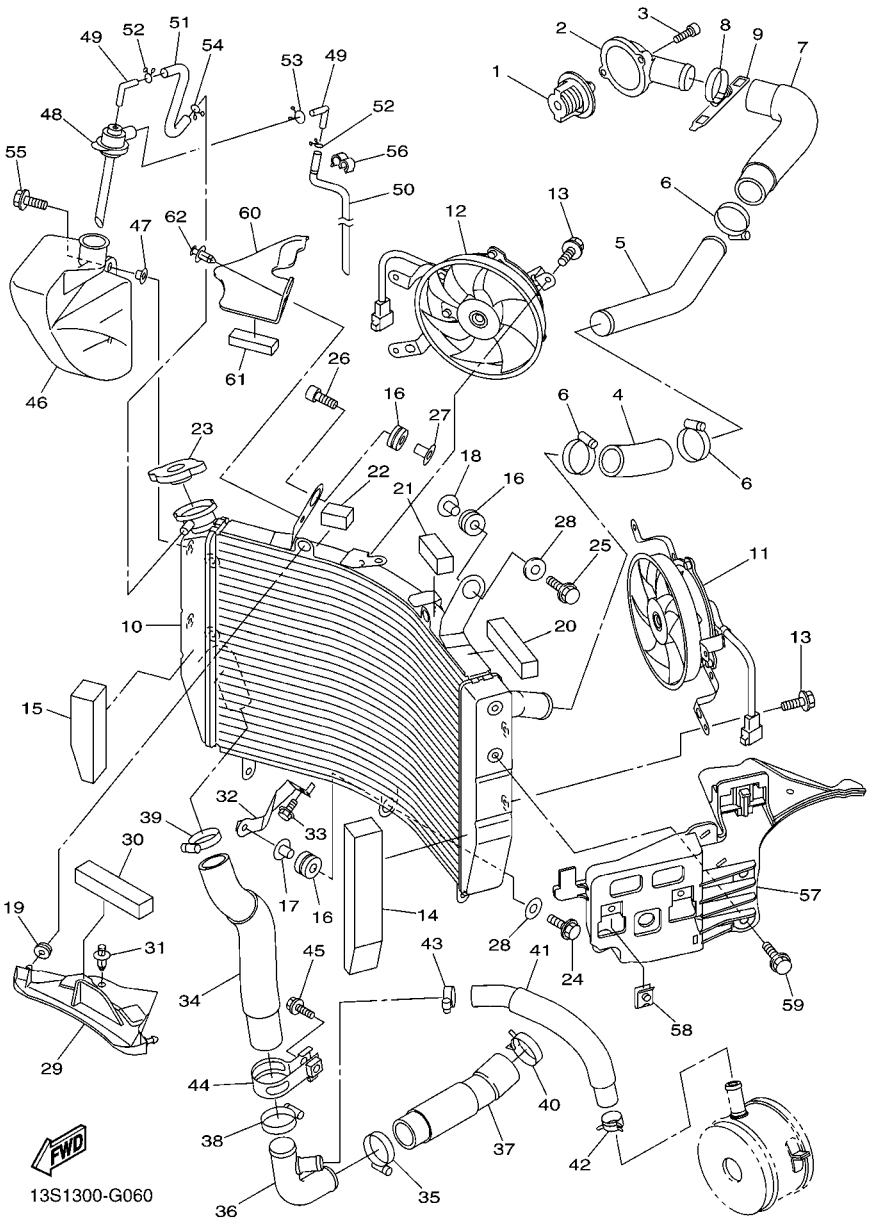

FIG. 6 RADIADOR & MANGUERA

REF. Nº	CODIGO Nº	DESCRIPCION	13S1					OBSERVACIONES
55	95802–06014	TORNILLO DE REBORDE	2					
56	90464–10M38	BRIDA	1					
57	13S–2836H–00	MENSULA 5	1					
58	90183–06069	TUERCA DE RESORTE	2					
59	95802–06014	TORNILLO DE REBORDE	2					
60	2C0–1246H–00	CUBIERTA 5	1					
61	13S–12668–00	AMORTIGUADOR DE CUBIERTA 3	1					
62	90269–06083	REMACHE	1					

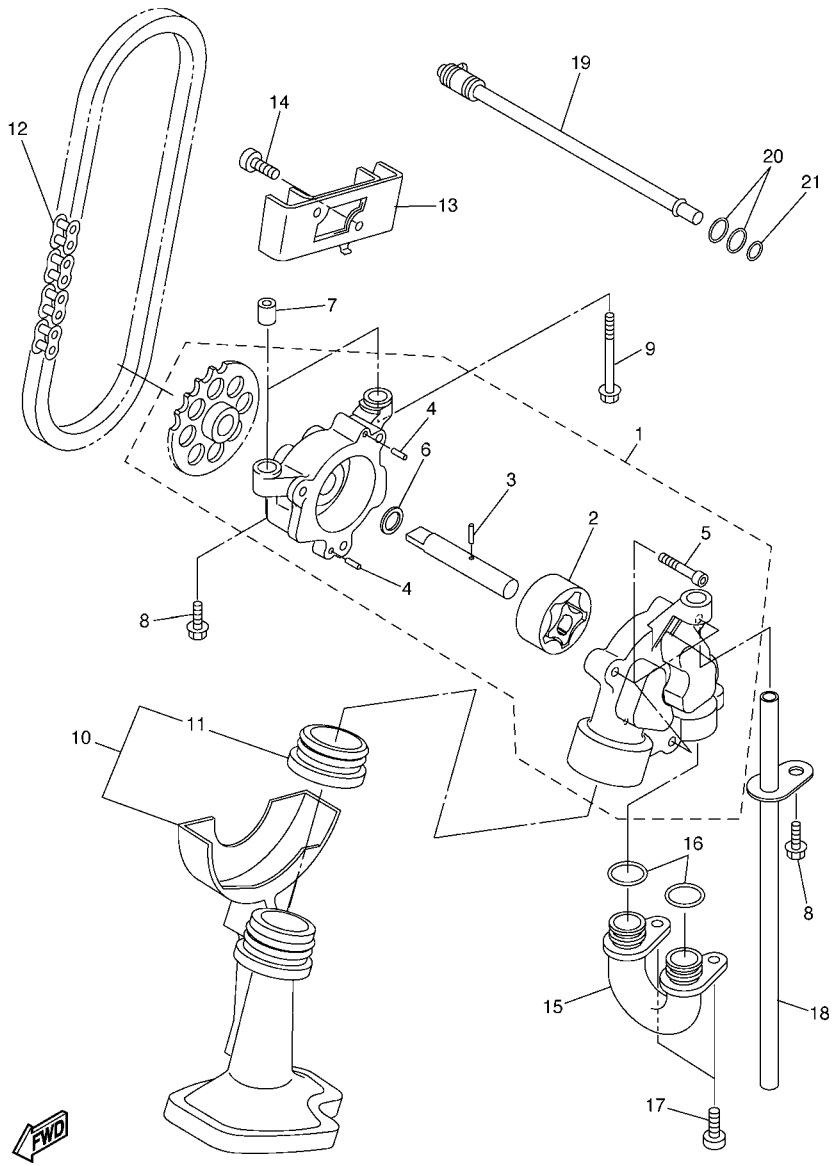

2C01300-E070

FIG. 7 BOMBA DE ACEITE

REF. Nº	CODIGO Nº	DESCRIPCION	13S1					OBSERVACIONES
1	2C0–13300–00	BOMBA DE ACEITE COMPLETA	1					
2	4SV–13310–00	.ROTOR COMPLETO 1	1					
3	93603–17070	.PASADOR DE CLAVIJA	1					
4	93603–09106	.PASADOR DE CLAVIJA	2					
5	91312–06025	.TORNILLO	3					
6	90201–113K2	.ARANDELA PLANA	1					
7	91808–17032	PASADOR DE CLAVIJA	2					
8	95812–06030	TORNILLO DE REBORDE	2					
9	95812–06080	TORNILLO DE REBORDE	1					
10	2C0–13410–00	CAJA DE FILTRO COMPLETA	1					
11	2C0–13415–00	.SELLO COLADOR ACEITE	1					
12	94580–25074	CADENA	1					
13	2C0–13898–00	SOSTEN	1					
14	90110–06161	TORNILLO ALLEN	2					
15	2C0–13416–00	TUBO DE ACEITE 1	1					
16	93210–14003	ANILLO O	2					
17	90110–06161	TORNILLO ALLEN	2					
18	5EB–13161–00	TUBO CONDUCTOR 1	1					
19	2C0–1316E–00	TUBO, DE ENTREGA 5	1					
20	93210–09165	ANILLO O	2					
21	93210–06667	ANILLO O	1					

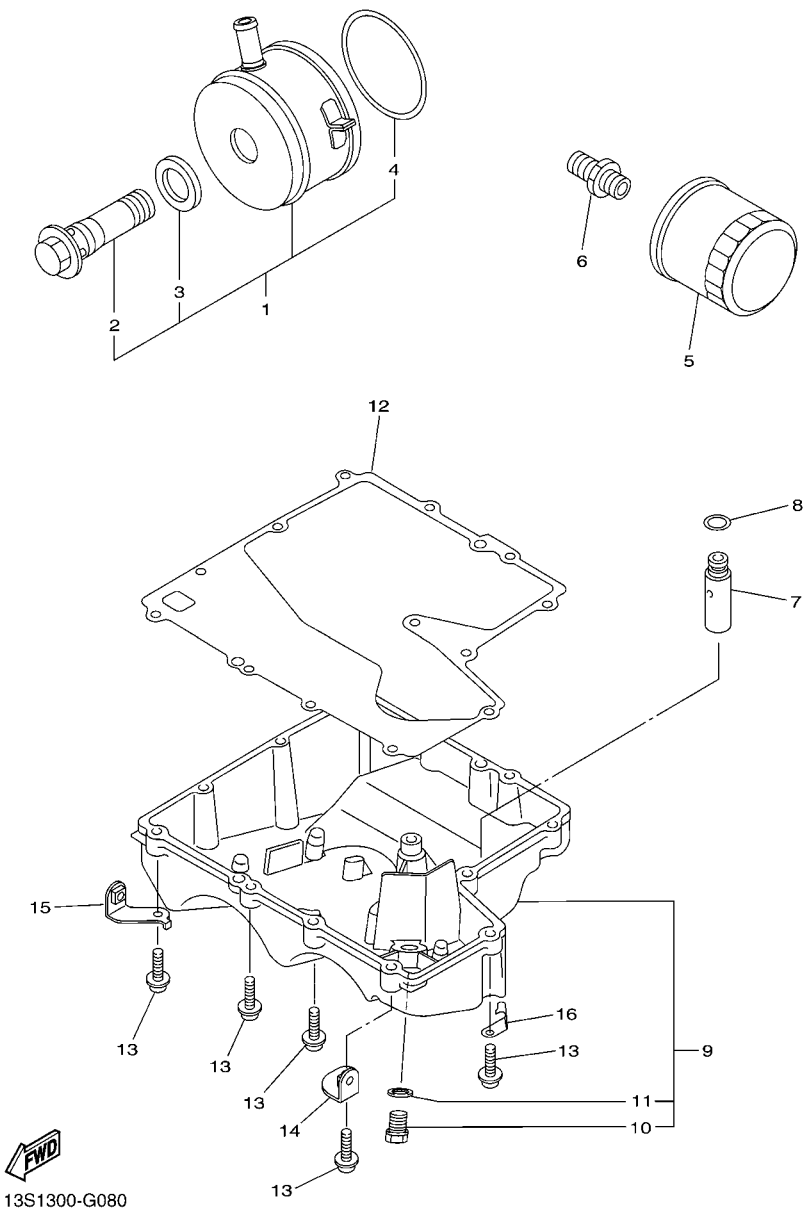

FIG. 8 FILTRO ACEITE

REF. Nº	CODIGO Nº	DESCRIPCION	13S1					OBSERVACIONES
1	13S–13470–00	ENFRIADOR DE ACEITE COMPLETO	1					
2	5EB–12822–00	.PERNO DE UNION	1					
3	5EB–13475–00	.EMPAQUE	1					
4	5JW–13473–00	.ANILLO O	1					
5	5GH–13440–20	ELEMENTO FILTRO DE ACEITE	1					
6	90401–20145	PERNO DE UNION	1					
7	2C0–13490–00	VALVELA DE DESCOMPRESION	1					
8	93210–15566	ANILLO O	1					
9	2C0–13417–00	TAPA DE FILTRO	1					
10	90340–14132	.TORNILLO, DE DRENAJE	1					
11	214–11198–01	.EMPAQUE	1					
12	2C0–13414–01	EMPAQUE DE TAPA FILTRO	1					
13	90109–06015	PERNO	13					
14	13S–2836A–00	SOPORTE 1	1					
15	13S–2836E–00	SOPORTE 2	1					
16	90465–10040	BRIDA	1					

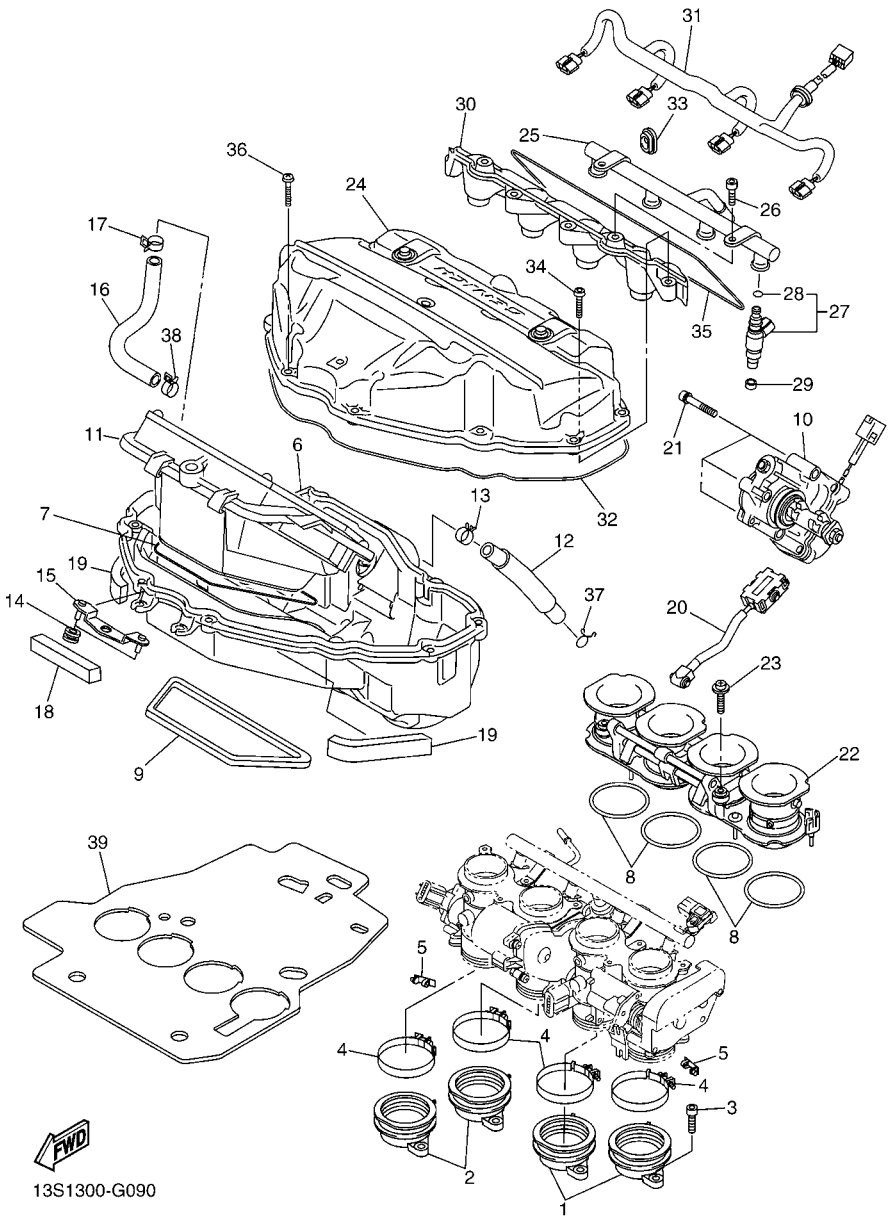

FIG. 9 ADMISION

REF. Nº	CODIGO Nº	DESCRIPCION	13S1					OBSERVACIONES
1	2C0–13586–00	TOBERA DE CARBURADOR 1	2					
2	2C0–13596–00	TOBERA DE CARBURADOR 2	2					
3	91312–06016	TORNILLO	8					
4	90450–56007	BRIDA, MANGUERA	4					
5	2C0–13881–00	CUBIERTA 1	2					
6	13S–14411–00	CAJA FILTRO DEL AIRE 1	1					
7	13S–14462–00	SELLO	1					
8	13S–14457–00	SELLO	4					
9	2C0–14467–00	SELLO	1					
10	13S–85870–00	MOTOR ENGRANADO 2	1					
11	13S–14450–00	ELEMENTO COMP.FILTRO DE AIRE	1					
12	13S–15373–00	MANGUELA DE RESPIRADERO	1					
13	90467–15001	PRESILLA	1					
14	90480–08264	TAPON	2					
15	13S–14498–00	SOPORTE 1	1					
16	13S–14882–00	TUBO 2	1					
17	90467–180A3	PRESILLA	1					
18	2C0–14409–00	AMORTIGUADOR	1					
19	2C0–14425–00	AMORTIGUADOR 1	2					
20	13S–14490–00	EJE CONJUNTO	1					
21	90110–05047	TORNILLO ALLEN	3					
22	13S–1440B–00	UNION COMPLETO	1					
23	90159–05035	TORNILLO CON VALONA	2					
24	13S–14421–00	CAJA FILTRO DEL AIRE 2	1					
25	13S–13938–00	TUBO DE ADMISION	1					
26	90111–06064	TORNILLO	2					
27	13S–13761–00	INYECTOR	4					

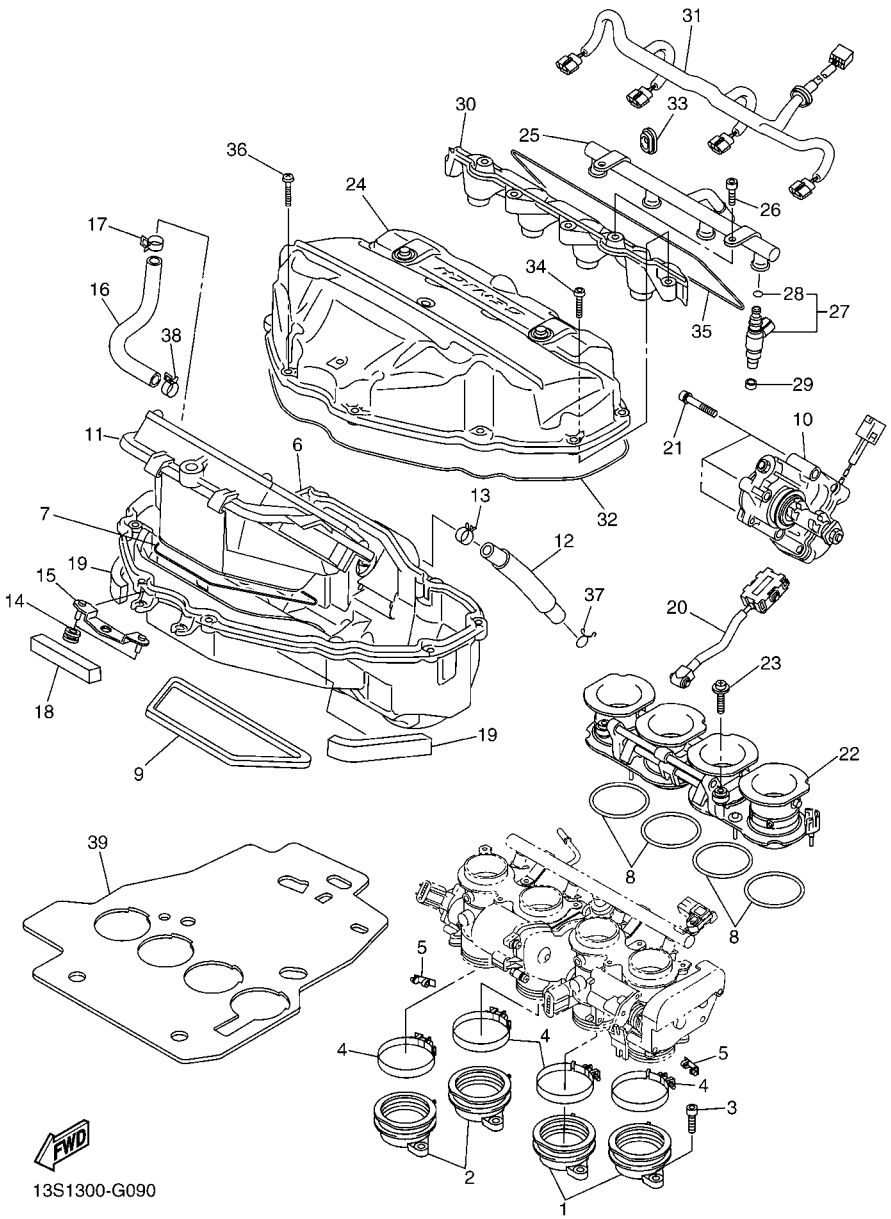

FIG. 9 ADMISION

REF. Nº	CODIGO Nº	DESCRIPCION	13S1					OBSERVACIONES
28	5PS–14147–00	.ANILLO O	1					
29	90430–09002	JUNTA	4					
30	13S–13767–00	TAPA DE INJECTOR	1					
31	13S–82318–00	CABLE SUBCONDUCTOR	1					
32	2C0–14452–00	SELLO	1					
33	13S–14445–00	TAPON PROTECTOR	1					
34	92012–06020	PERNO	4					
35	13S–1446R–00	SELLO	1					
36	98902–05020	TORNILLO DE AJUSTE	11					
37	90467–14015	PRESILLA	1					
38	90467–180A3	PRESILLA	1					
39	2C0–12682–00	PROTECTOR	1					

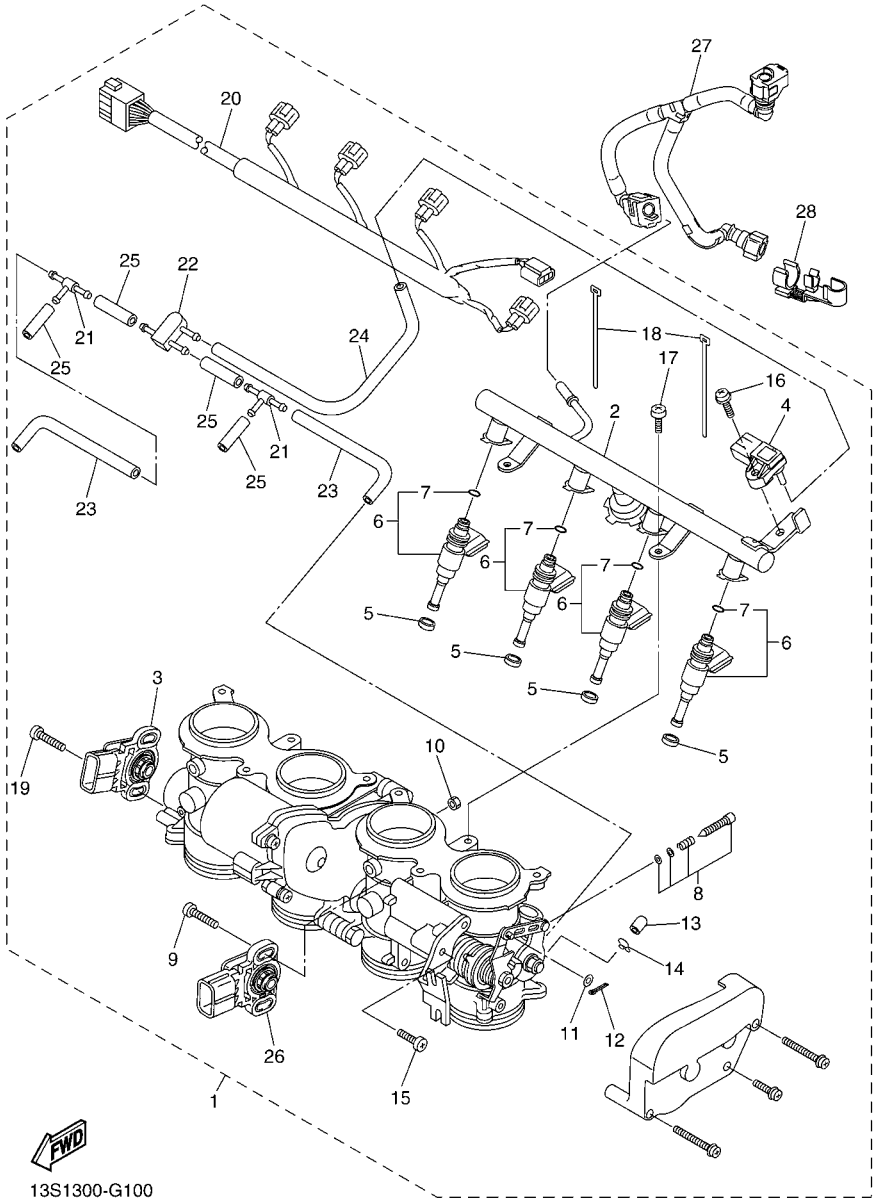

FIG. 10 ADMISION 2

REF. Nº	CODIGO Nº	DESCRIPCION	13S1					OBSERVACIONES
1	13S–13750–00	CAJA DE ACELERADOR COMPL.	1					
2	13S–13930–00	.PIPE INLET COMPL.	1					
3	13S–85885–00	.TERMICA SENSORIO	1					
4	2C0–82380–00	.SENSOR DE PRESION	1					
5	8FP–13556–00	.EMPAQUE	4					
6	2C0–13761–00	.INYECTOR	4					
7	5PS–14147–00	..ANILLO O	1					
8	2C0–14105–00	.TORNILLO DE PILOTO	4					
9	5FL–14216–00	.TORNILLO	2					
10	95307–04700	.TUERCA	1					
11	22U–14952–00	.ARANDELA	1					
12	91492–12010	.PASADOR DE CHAVETA	1					
13	895–14169–00	.FUNDA	4					
14	8A7–14139–00	.PRESILLA TUBO	4					
15	98507–05012	.TORNILLO DE CABEZA PLANA	2					
16	2C0–14216–00	.TORNILLO	1					
17	98507–06012	.TORNILLO DE CABEZA PLANA	2					
18	4KM–14137–00	.PRESILLA	2					
19	8CC–14216–10	.TORNILLO	2					
20	13S–82386–00	.EXTENSION, ARNES DE CABLES	1					
21	68V–24376–00	.TUBO DE UNION 1	2					
22	3XV–14251–00	.NIPLE	1					
23	68V–13533–00	.MANGUERA, DE VACIO 4	2					
24	2C0–13532–00	.MANGUERA, DE VACIO 3	1					
25	5FL–14348–10	.MANGUERA	4					
26	13S–85884–00	.TERMICA SENSORIO	1					
27	13S–13971–01	ANILLO DE ESPACIADOR	1					

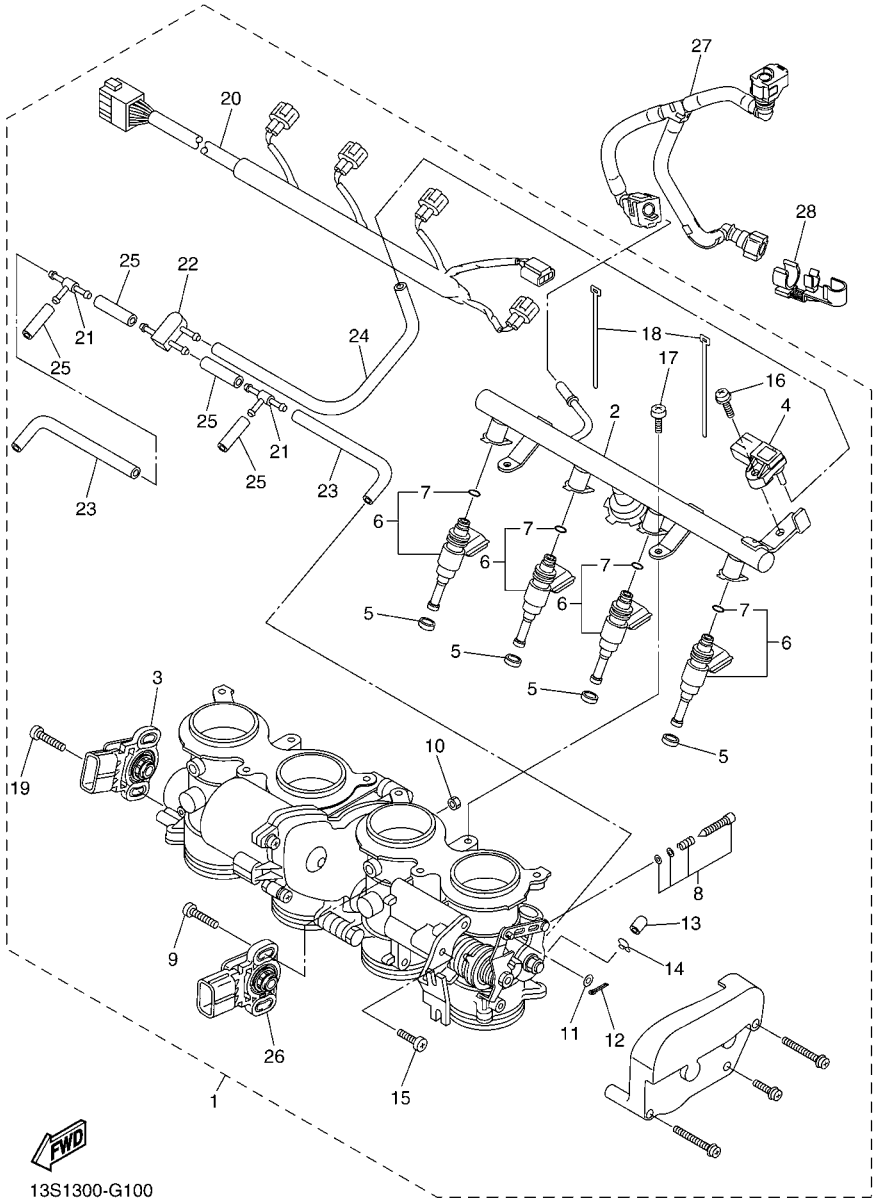

FIG. 10 ADMISION 2

REF. Nº	CODIGO Nº	DESCRIPCION	13S1					OBSERVACIONES
28	90464–16005	BRIDA	1					

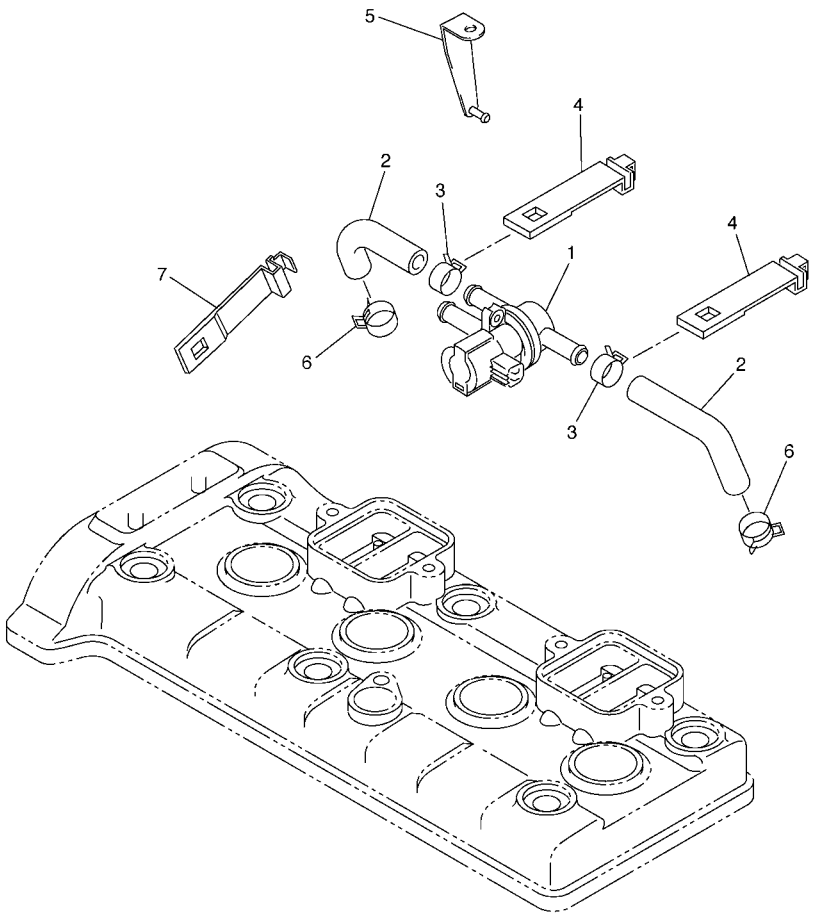

2C01300-E110

FIG. 11 SYSTEMA DE INDUCCION DE AIRE

REF. Nº	CODIGO Nº	DESCRIPCION	13S1					OBSERVACIONES
1	2C0–14840–00	VALVULA, CORTE DE AIRE	1					
2	2C0–14881–00	TUBO 1	2					
3	90467–18172	PRESILLA	2					
4	5JW–14723–00	CUBIERTA	2					
5	2C0–21249–00	SOPORTE	1					
6	90467–180A0	PRESILLA	2					
7	5JW–14723–00	CUBIERTA	1					

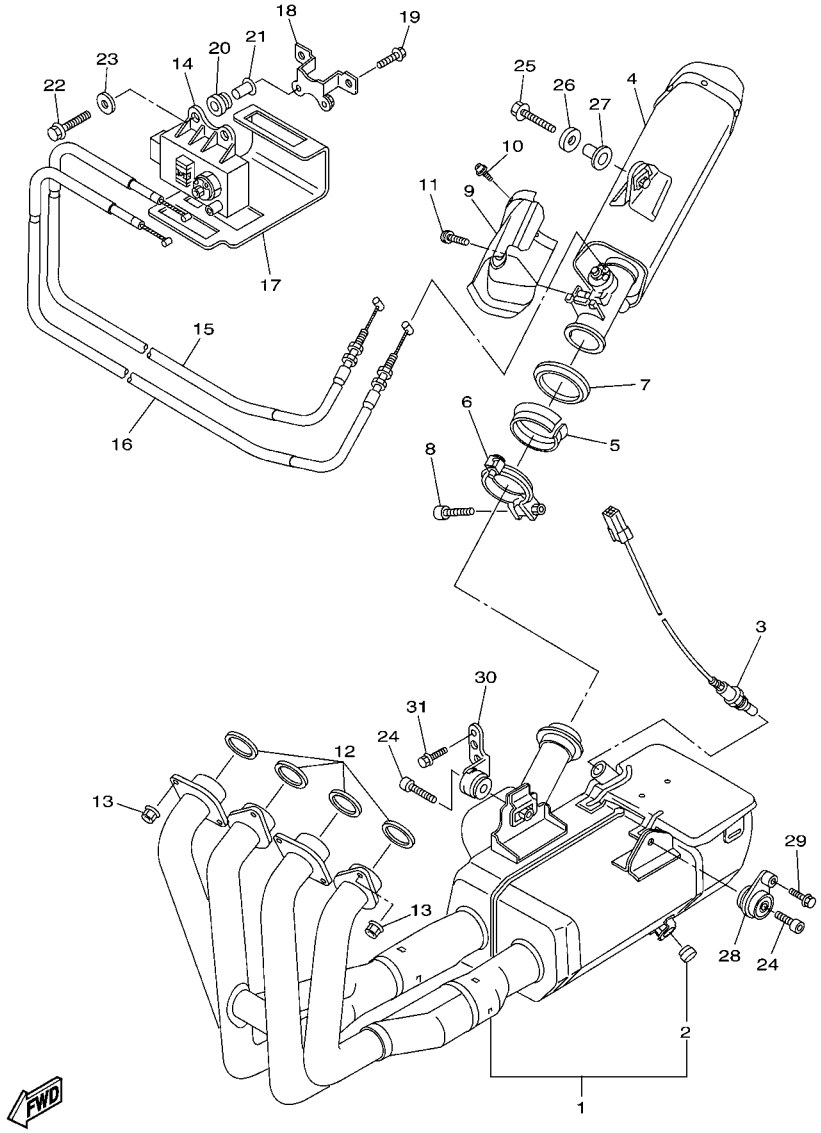

13S1300-G120

FIG. 12 DESCARGA

REF. Nº	CODIGO Nº	DESCRIPCION	13S1					OBSERVACIONES
1	13S–14610–00	TUBO DE ESCAPE COMPLETO 1	1					
2	4FM–24181–00	.AMORTIGUADOR DE MONTAJE 1	2					
3	13S–8592A–00	SENSOR	1					
4	13S–14753–00	SILENCIADOR DE ESCAPE	1					
5	2C0–14618–00	ANILLO DE TOPE	1					
6	2C0–14725–00	BANDA DE SILENCIADOR	1					
7	2C0–14623–00	EMPAQUE	1					
8	91314–06030	PERNO	1					
9	13S–14718–00	PROTECTOR DE SILENCIADOR 1	1					
10	90111–06099	TORNILLO	2					
11	90111–06071	TORNILLO	1					
12	4FM–14613–00	JUNTA, TUBO DE ESCAPE	4					
13	90179–08410	TUERCA	8					
14	2C0–85820–00	UNIDADDELSERVOMOTOR	1					
15	13S–1133E–01	CABLE DE POLEA	1					
16	13S–1133F–01	CABLE DE POLEA	1					
17	2C0–2177F–00	CUBIERTA	1					
18	2C0–2116J–00	SOPORTE 7	1					
19	95027–06025	PERNO, DE BRIDA	2					
20	90480–14005	TAPON	2					
21	90387–063E6	ESPACIADOR	2					
22	95827–06014	TORNILLO	2					
23	90201–06M31	ARANDELA PLANA	2					
24	91314–08035	PERNO	2					
25	90105–08063	TORNILLO	1					
26	90201–087G2	ARANDELA PLANA	1					
27	90387–08021	ESPACIADOR	1					

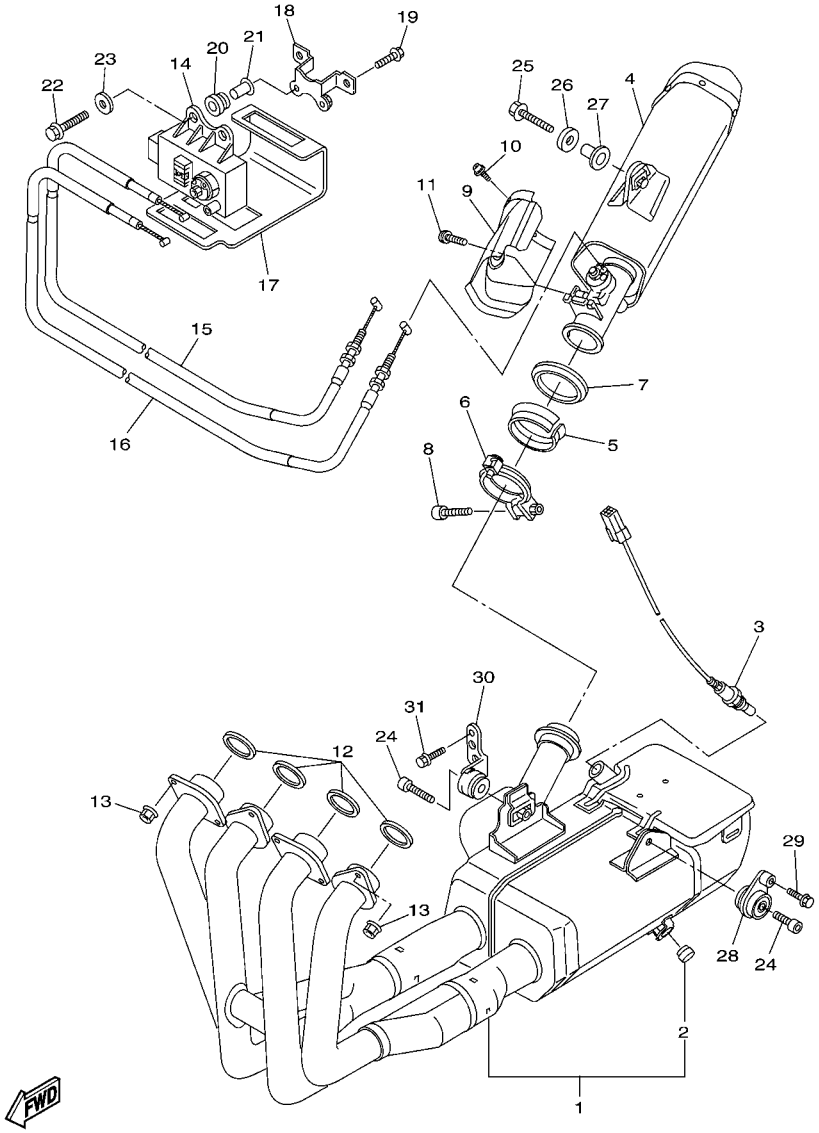

13S1300-G120

FIG. 12 DESCARGA

REF. Nº	CODIGO Nº	DESCRIPCION	13S1					OBSERVACIONES
28	13S–21446–00	SOPORTE DE SILENCIADOR 2	1					
29	90105–08054	TORNILLO	1					
30	13S–21445–00	SOPORTE DE SILENCIADOR 1	1					
31	90105–08171	TORNILLO	1					

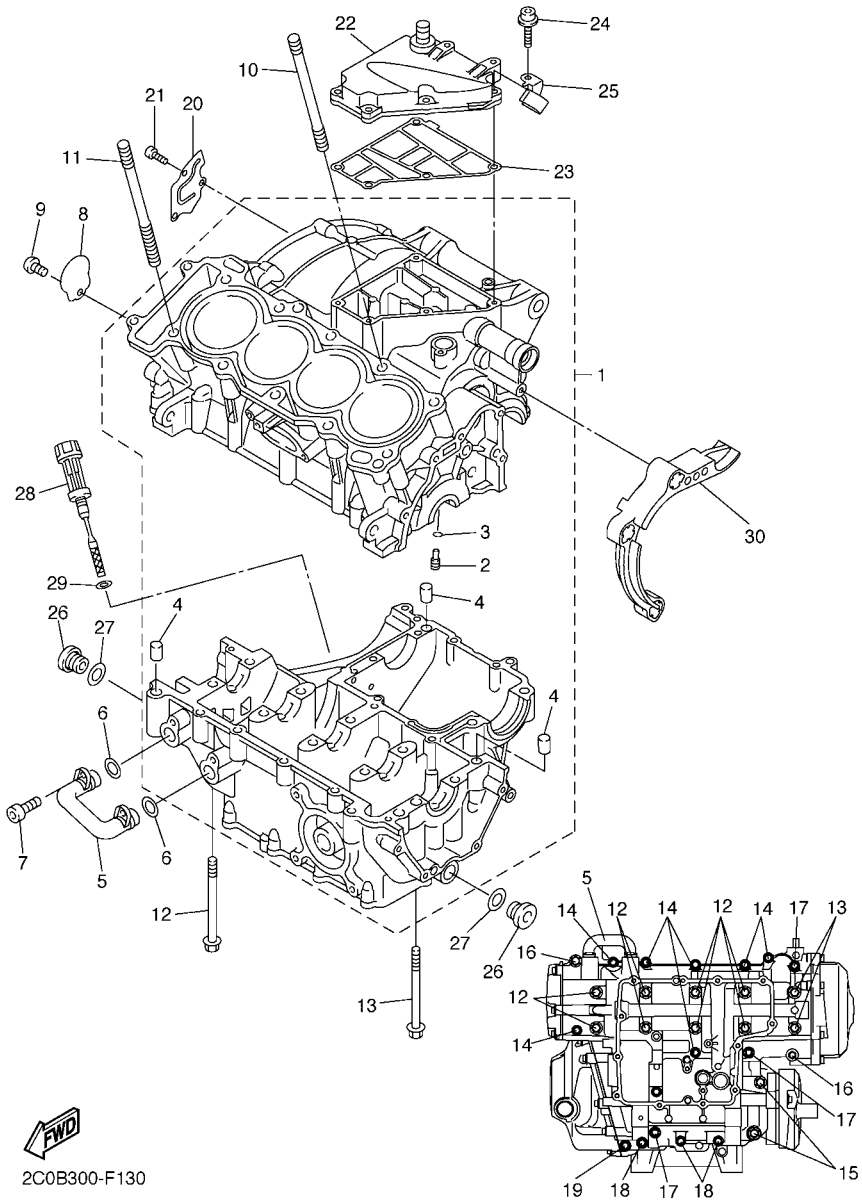

FIG. 13 CARTER

REF. Nº	CODIGO Nº	DESCRIPCION	13S1					OBSERVACIONES
1	2C0–15100–01	CARTER COMPLETO	1					
2	5EB–15155–00	.BOQUILLA 3	4					
3	93210–04092	.ANILLO O	4					
4	99530–10014	.PASADOR, DE ESPIGA	3					
5	5VX–13418–00	TUBO DE ACEITE 2	1					
6	93210–14579	ANILLO O	2					
7	90110–06161	TORNILLO ALLEN	2					
8	13S–15189–00	TAPON	1					
9	90149–06082	TORNILLO DE REGLAJE	1					
10	90116–10025	ESPARRAGO	1					
11	90116–10026	ESPARRAGO	9					
12	90119–08083	TORNILLO CON ARANDELA	8					
13	90119–08084	TORNILLO CON ARANDELA	2					
14	95812–06055	TORNILLO DE REBORDE	7					
15	95812–08065	TORNILLO DE REBORDE	2					
16	90109–06100	PERNO	2					
17	95812–06065	TORNILLO DE REBORDE	3					
18	95812–06045	TORNILLO DE REBORDE	3					
19	95812–06030	TORNILLO DE REBORDE	1					
20	2C0–11165–00	PLACA RESPIRADERO	1					
21	90149–06082	TORNILLO DE REGLAJE	3					
22	2C0–15413–01	CUBIERTA	1					
23	2C0–15462–01	EMPAQ CUBIERTA DE CARTER 3	1					
24	90109–06015	PERNO	5					
25	2C0–24136–10	GRAMPA 2	1					
26	36Y–15189–00	TAPON	2					
27	93210–16325	ANILLO O	2					

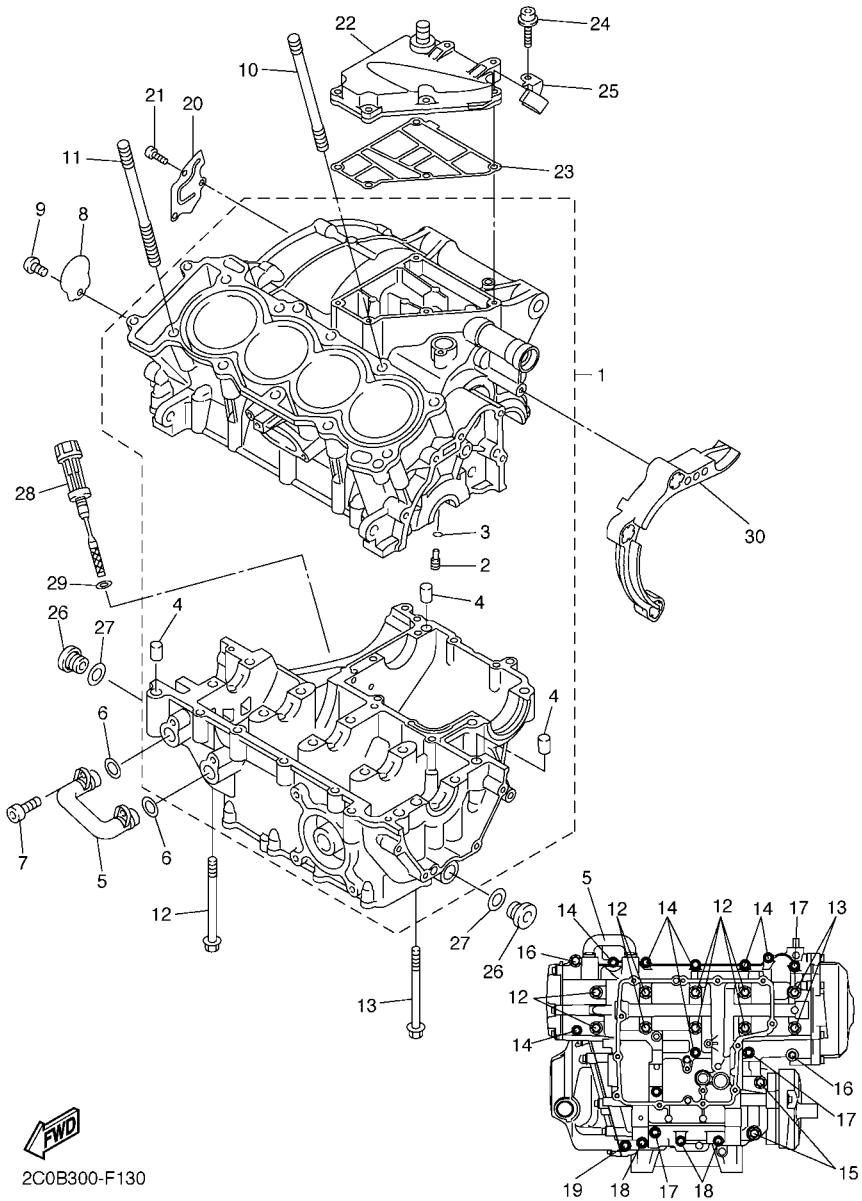

FIG. 13 CARTER

REF. Nº	CODIGO Nº	DESCRIPCION	13S1					OBSERVACIONES
28	2C0–15362–00	TAPON DEL NIVEL DE ACEITE	1					
29	93210–09165	ANILLO O	1					
30	2C0–15377–00	GUIA DE ENTRADA	1					

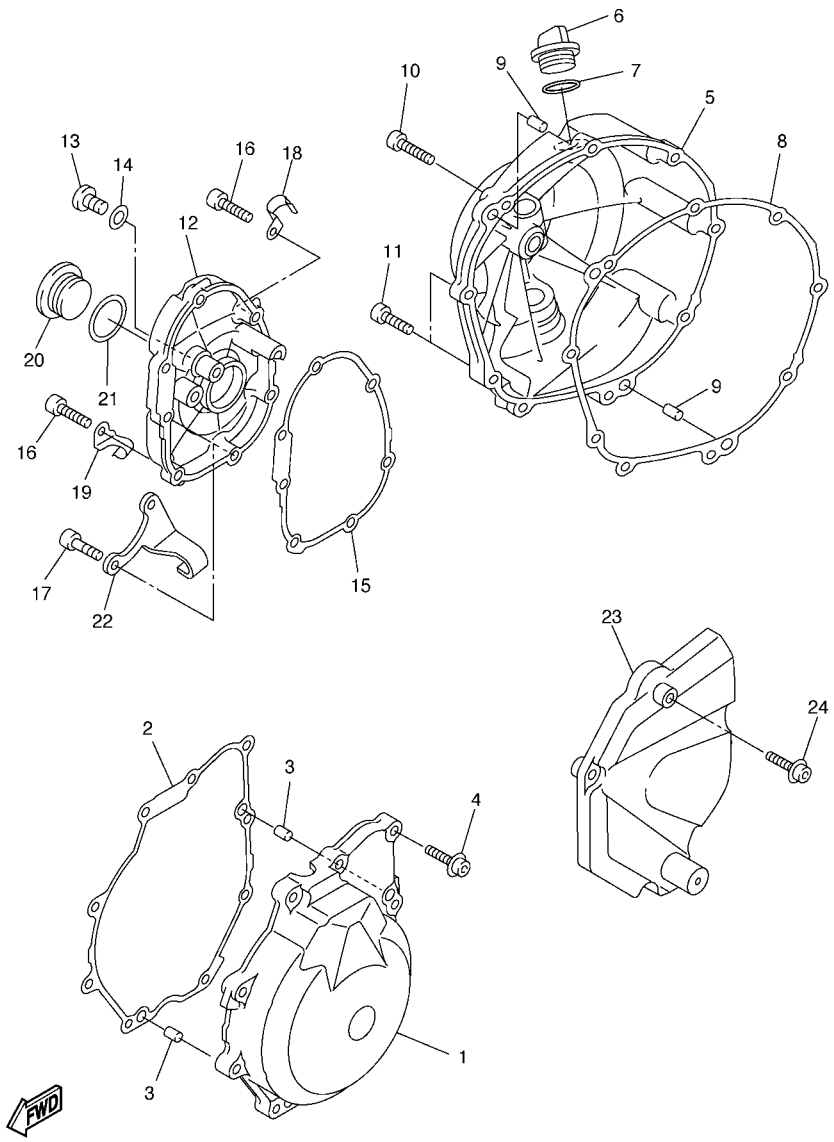

2C01300-E140

FIG. 14 CUBIERTA DE CARTER 1

REF. Nº	CODIGO Nº	DESCRIPCION	13S1					OBSERVACIONES
1	2C0–15411–01	CUBIERTA DE CARTER 1	1					
2	2C0–15451–01	EMPAQ DE CUBIERTA DE CARTER	1					
3	99530–08012	PASADOR, DE ESPIGA	2					
4	90109–06015	PERNO	9					
5	2C0–15421–00	TAPA DE CARTER DERECHA	1					
6	3F9–15362–00	TAPON DEL NIVEL DE ACEITE	1					
7	93210–27194	ANILLO O	1					
8	2C0–15461–01	JUNTA TAPA CARTER DERECHO 2	1					
9	93608–17263	PASADOR DE CLAVIJA	2					
10	90109–06031	PERNO	7					
11	90110–06156	TORNILLO ALLEN	2					
12	2C0–15416–00	CUBIERTA DE BOMBA DE ACEITE	1					
13	92014–08014	PERNO	1					
14	90430–08143	JUNTA	1					
15	2C0–15456–01	EMPAQ CUBTA.BOMBA ACEITE 1	1					
16	90110–06303	TORNILLO ALLEN	5					
17	90109–06015	PERNO	2					
18	90465–08395	BRIDA	1					
19	2C0–21823–00	GRAMPA DE MANGUERA	1					
20	90340–32004	TORNILLO, DE DRENAJE	1					
21	93210–32172	ANILLO O	1					
22	2C0–15441–00	SOSTEN DE CABLE DE EMBRAGUE	1					
23	2C0–15418–00	CUBIERTA CAJA DE CADENA	1					
24	90110–06060	TORNILLO ALLEN	3					

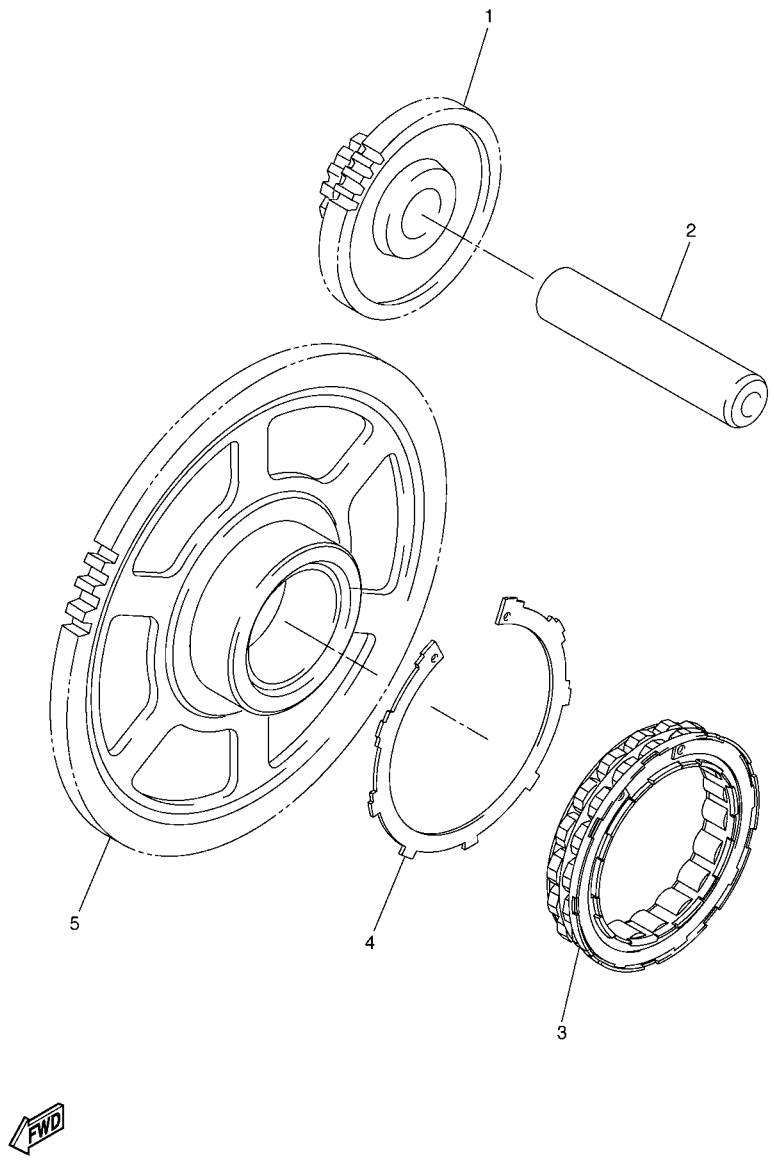

FIG. 15 ARRANQUE

REF. Nº	CODIGO Nº	DESCRIPCION	13S1					OBSERVACIONES
1	2C0–15512–00	ENGRENAJE NEUTRO	1					
2	5MT–15521–00	EJE 1	1					
3	2C0–15580–00	ENSAMBLE EXT.EMBRAGUE ARRANQUE	1					
4	2C0–15536–00	GRAMPA DE ARRANQUE	1					
5	2C0–15515–00	ENGRANAJE 3	1					

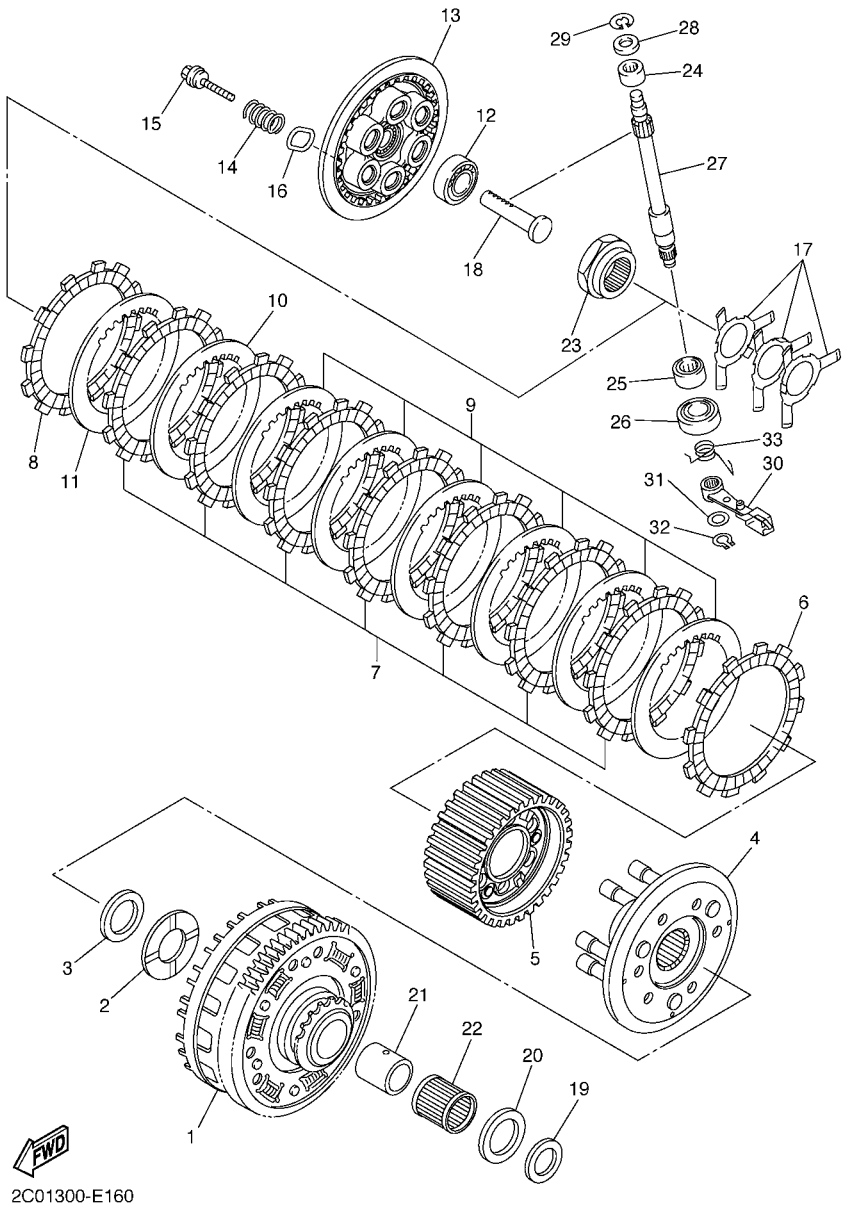

FIG. 16 EMBRAGUE

REF. Nº	CODIGO Nº	DESCRIPCION	13S1					OBSERVACIONES
1	2C0–16150–00	CAMPANA DE EMBRAGUE	1					
2	2C0–16154–00	ARANDELA, DE EMPUJE 1	1					
3	90208–25002	ARANDELA DE RESORTE CONICO	1					
4	2C0–16360–00	PLACA DE PRESION COMPL. 2	1					
5	2C0–16370–00	COPA DE EMBRAGUE COMPLETA	1					
6	5SL–16321–00	PLACA DE FRICCION	1					
7	5LV–16321–20	PLACA DE FRICCION	7					
8	4FN–16321–00	PLACA DE FRICCION	1					
9	3J2–16324–00	DISCO, DE EMBRAGUE (T=2.0)	6					
10	3J2–16324–00	DISCO, DE EMBRAGUE (T=2.0)	1					UR
	168–16324–00	DISCO, DE EMBRAGUE (T=2.3)	1					UR
11	3J2–16324–00	DISCO, DE EMBRAGUE (T=2.0)	1					UR
	168–16325–00	DISCO, DE EMBRAGUE (T=1.6)	1					UR
	168–16324–00	DISCO, DE EMBRAGUE (T=2.3)	1					UR
12	93306–00106	COJINETE	1					
13	2C0–16351–00	PLATO DE PRESION	1					
14	90501–220A2	RESORTE DE COMPRESION	6					
15	90159–06024	TORNILLO CON VALONA	6					
16	2C0–16384–00	PLACA DE ASIENTO	6					
17	13S–16539–00	RESORTE	3					
18	2C0–16356–00	VARILLA DE EMPUJE 1	1					
19	2C0–16164–00	PLACA DE EMPUJE 2	1					
20	1AE–16164–00	PLACA DE EMPUJE 2	1					
21	2C0–16181–00	SEPARADOR	1					
22	93310–340N8	COJINETE DE RODILLOS	1					
23	2C0–16377–00	TUERCA DE CIERRE	1					
24	93317–11096	COJINETE	1					

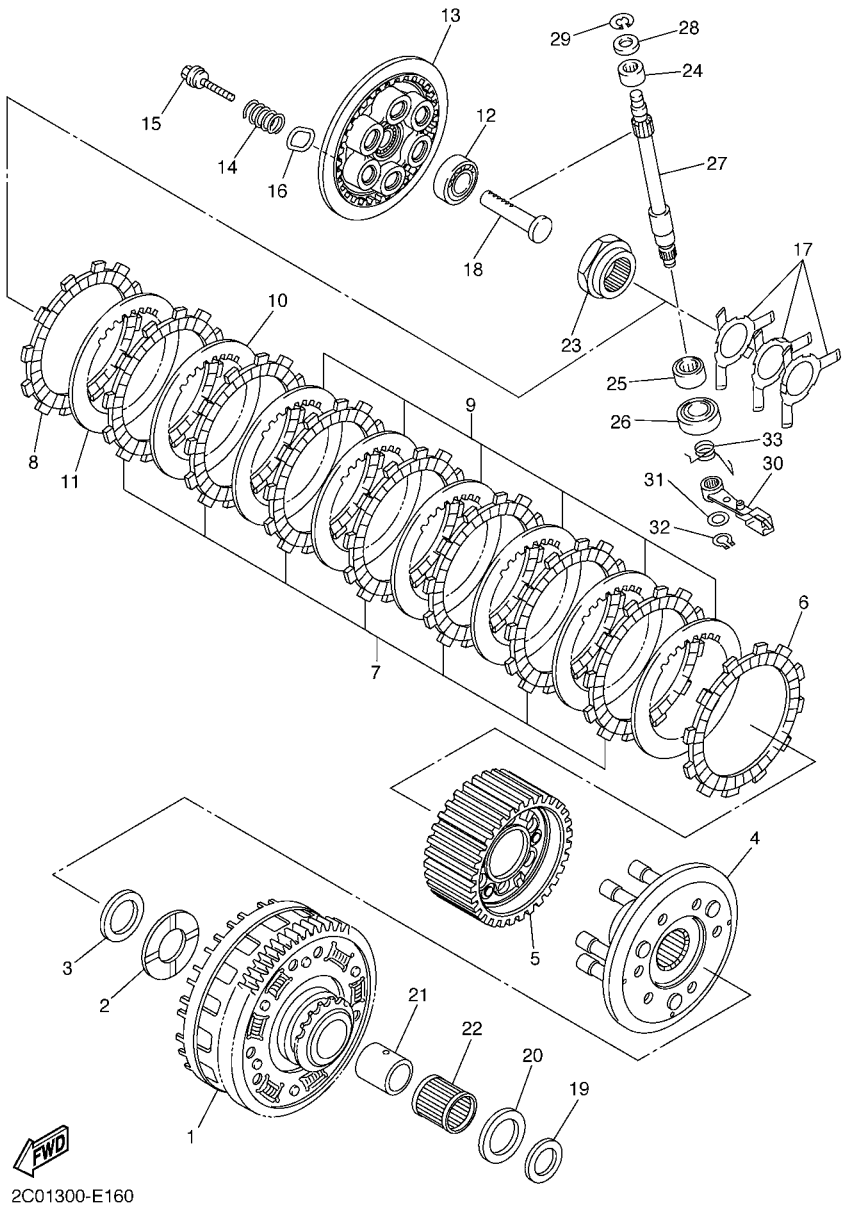

FIG. 16 EMBRAGUE

REF. Nº	CODIGO Nº	DESCRIPCION	13S1					OBSERVACIONES
25	93315–21570	COJINETE DE RODILLOS	1					
26	93102–15212	SELLO ACEITE	1					
27	2C0–16382–00	EJE DE PALANCA DE EMPUJE	1					
28	92907–08600	ARANDELA	1					
29	99001–07600	PRESILLA REDONDA	1					
30	2C0–16340–00	PALANCA DE EMPUJE COMPLETA	1					
31	90201–10029	ARANDELA PLANA	1					
32	99009–10400	PRESILLA REDONDA	1					
33	90508–16052	RESORTE DE TORSION	1					

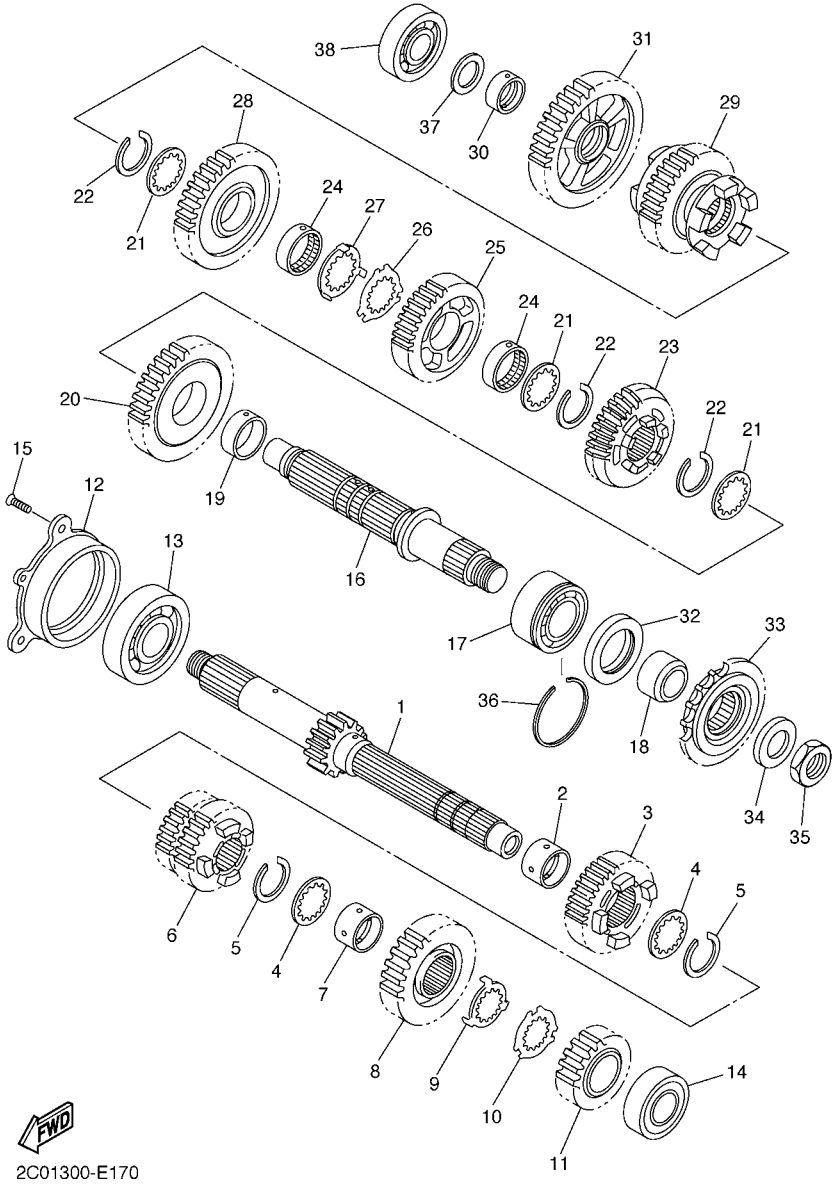

FIG. 17 TRANSMISION

REF. Nº	CODIGO Nº	DESCRIPCION	13S1					OBSERVACIONES
1	2C0–17411–00	EJE, PRINCIPAL (12T)	1					
2	90387–250R3	ESPACIADOR	1					
3	13S–17151–00	ENGRANAJE PINON DE 5TA (21T)	1					
4	90209–21332	ARANDELA DE SEPARACION	2					
5	93440–25186	SEGURO	2					
6	13S–17131–00	ENGRANAJE PINON DE 3RA(18/18T)	1					
7	90387–21003	ESPACIADOR	1					
8	2C0–17161–00	ENGRANAJE PINON 6TA (20T)	1					
9	90209–22352	ARANDELA DE SEPARACION	1					
10	90209–21351	ARANDELA DE SEPARACION	1					
11	13S–17121–00	ENGRANAJE DE PINON DE 2DA(16T)	1					
12	2C0–15163–00	CAJA DE COJINETE 1	1					
13	93306–20562	COJINETE	1					
14	93306–20464	COJINETE	1					
15	90151–06024	TORNILLO EMBUTIDO	3					
16	2C0–17421–00	EJE SECUNDARIO	1					
17	93305–20509	COJINETE	1					
18	90387–25016	ESPACIADOR	1					
19	90387–28011	ESPACIADOR	1					
20	13S–17221–00	ENGRANAJE RUEDA DE 2DA (32T)	1					
21	90209–25011	ARANDELA DE SEPARACION	3					
22	93440–28184	SEGURO	3					
23	2C0–17261–00	ENGRANAJE RUEDA DE 6TA (23T)	1					
24	90387–25015	ESPACIADOR	2					
25	2C0–17241–00	ENGRANAJE DE RUEDA 4TA (26T)	1					
26	90214–25004	ARANDELA DE POSICION	1					
27	90214–25003	ARANDELA DE POSICION	1					

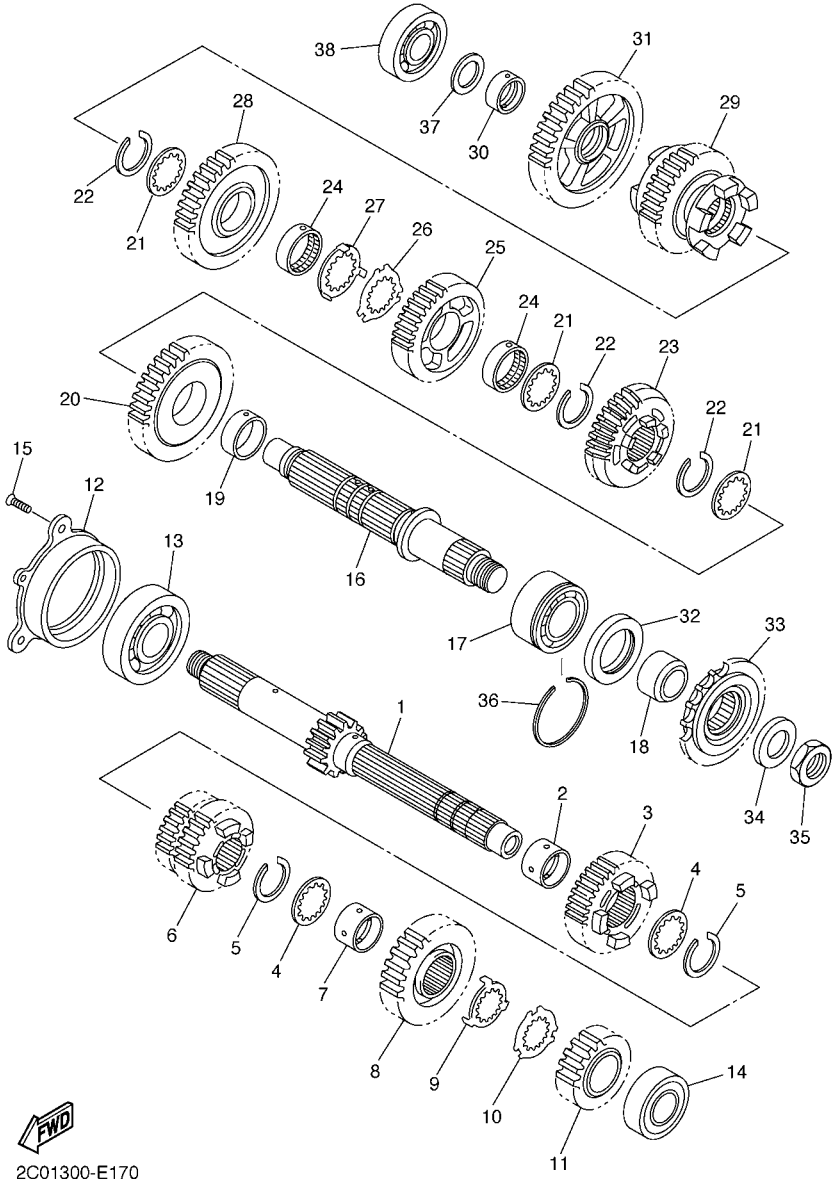

FIG. 17 TRANSMISION

REF. Nº	CODIGO Nº	DESCRIPCION	13S1					OBSERVACIONES
28	2C0–17231–00	ENGRANAJE RUEDA DE 3RA (30T)	1					
29	13S–17251–00	ENGRANAJE RUEDA DE 5TA (27T)	1					
30	90387–21004	ESPACIADOR	1					
31	2C0–17211–00	ENGRANAJE RUEDA DE 1 RA (31T)	1					
32	93102–35017	SELLO ACEITE	1					
33	2C0–17460–00	RUEDA DENTADA (16T)	1					
34	90201–20023	ARANDELA PLANA	1					
35	90179–20011	TUERCA	1					
36	93440–52014	SEGURO	1					
37	90201–20278	ARANDELA PLANA	1					
38	93306–20464	COJINETE	1					

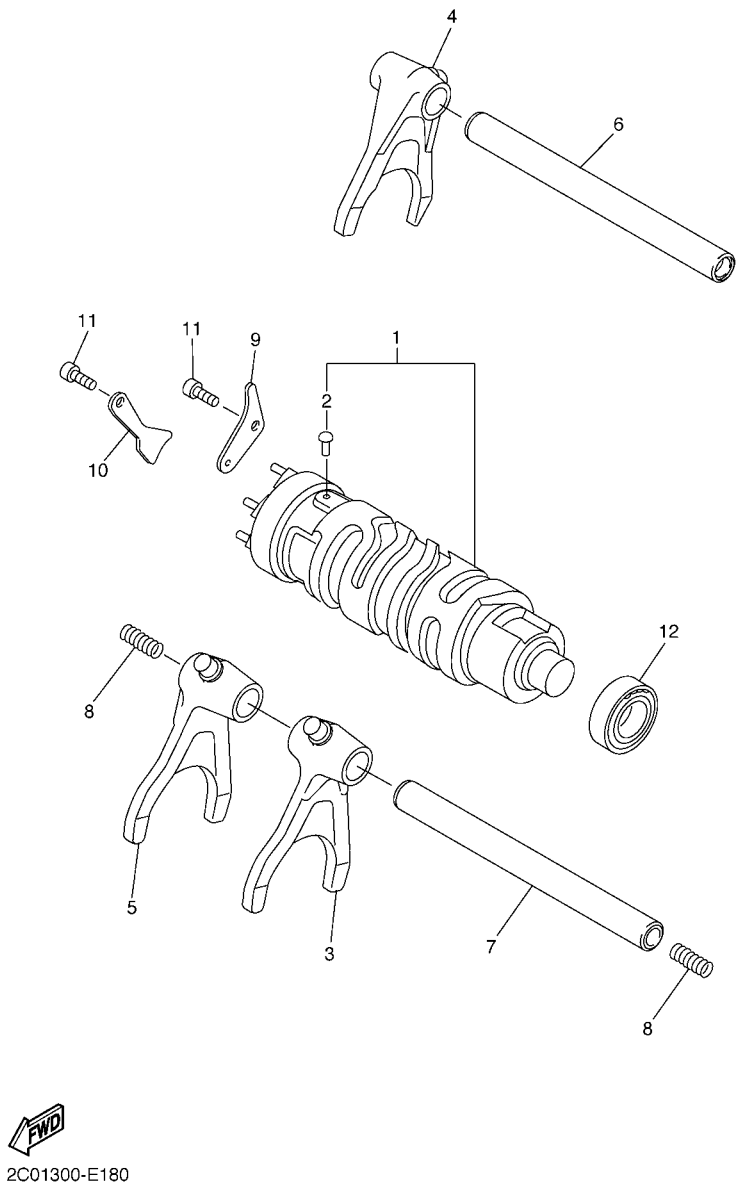

FIG. 18 LEVA DE CAMBIO & HORQUILLA

REF. Nº	CODIGO Nº	DESCRIPCION	13S1					OBSERVACIONES
1	2C0–18540–00	LEVA DEL CAMBIO COMPLETA	1					
2	136–18542–00	.PUNTO MUERTO	1					
3	2C0–18511–00	HORQUILLA DEL CAMBIO 1	1					
4	2C0–18512–00	HORQUILLA DEL CAMBIO 2	1					
5	2C0–18513–00	HORQUILLA DEL CAMBIO 3	1					
6	2C0–18531–00	BARRA GUIA HORQ. CAMBIO 1	1					
7	2C0–18535–00	BARRA GUIA HORQ .CAMBIO 2	1					
8	90501–080A2	RESORTE DE COMPRESION	2					
9	2C0–18536–00	TOPE DE PALANCA SELECTOR	1					
10	2C0–18562–00	PLACA DE TOPE 2	1					
11	90110–06182	TORNILLO ALLEN	2					
12	93306–00106	COJINETE	1					

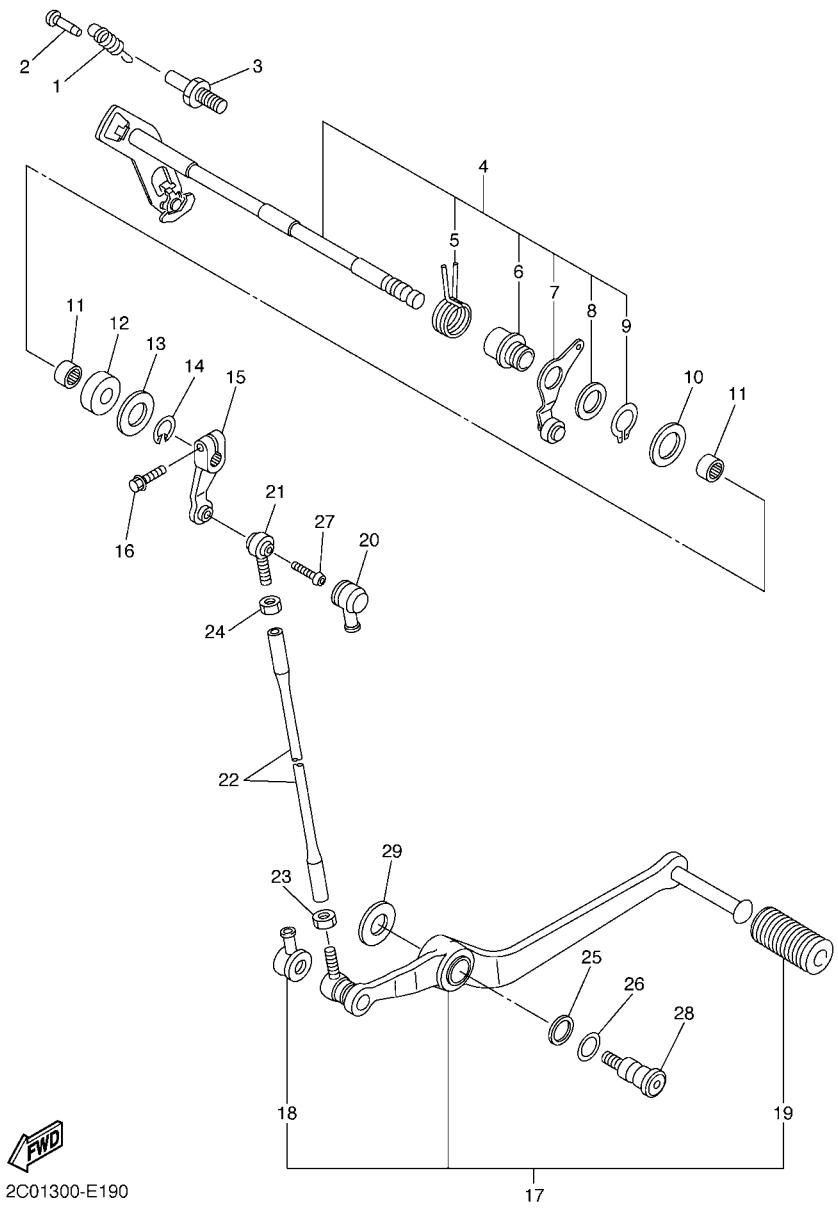

FIG. 19 EJE DE CAMBIO & PEDAL

REF. Nº	CODIGO Nº	DESCRIPCION	13S1					OBSERVACIONES
1	2C0–18144–00	GANCHO DE RESORTE	1					
2	132–16346–00	GANCHO DE RESORTE	1					
3	1D7–18127–00	PASADOR DE PALANCA	1					
4	2C0–18101–00	EJE SELECTOR COMPLETO	1					
5	90508–32020	.RESORTE DE TORSION	1					
6	2C0–18175–00	.ESPACIADOR	1					
7	2C0–18140–00	.PALANCA DE TOPE COMPLETA	1					
8	90201–177G4	.ARANDELA PLANA	1					
9	99009–17400	.PRESILLA REDONDA	1					
10	90201–127E1	ARANDELA PLANA	1					
11	93317–11295	COJINETE	2					
12	93102–12106	SELLO ACEITE (SD 12-22-5 HS)	1					
13	90201–12575	ARANDELA PLANA	1					
14	99001–10600	PRESILLA REDONDA	1					
15	5PW–18112–00	BRAZO DEL CAMBIO	1					
16	95822–06020	TORNILLO DE REBORDE	1					
17	2C0–18110–01	PEDAL DE CAMBIO COMPLETO	1					
18	2H9–18154–00	.CUBIERTA GUARDAPOLVO	1					
19	5EB–18113–00	.FUNDA DEL PEDAL DEL CAMBIO	1					
20	4XV–18154–00	CUBIERTA GUARDAPOLVO	1					
21	5LV–18116–00	VARILLA DE CONECTOR 1	1					
22	2C0–18115–00	VARILLA DEL CAMBIO	1					
23	90170–08358	TUERCA	1					
24	95304–06700	TUERCA	1					
25	90201–12013	ARANDELA PLANA	1					
26	90206–12074	ARANDELA ONDULADA	1					
27	90111–06019	TORNILLO	1					

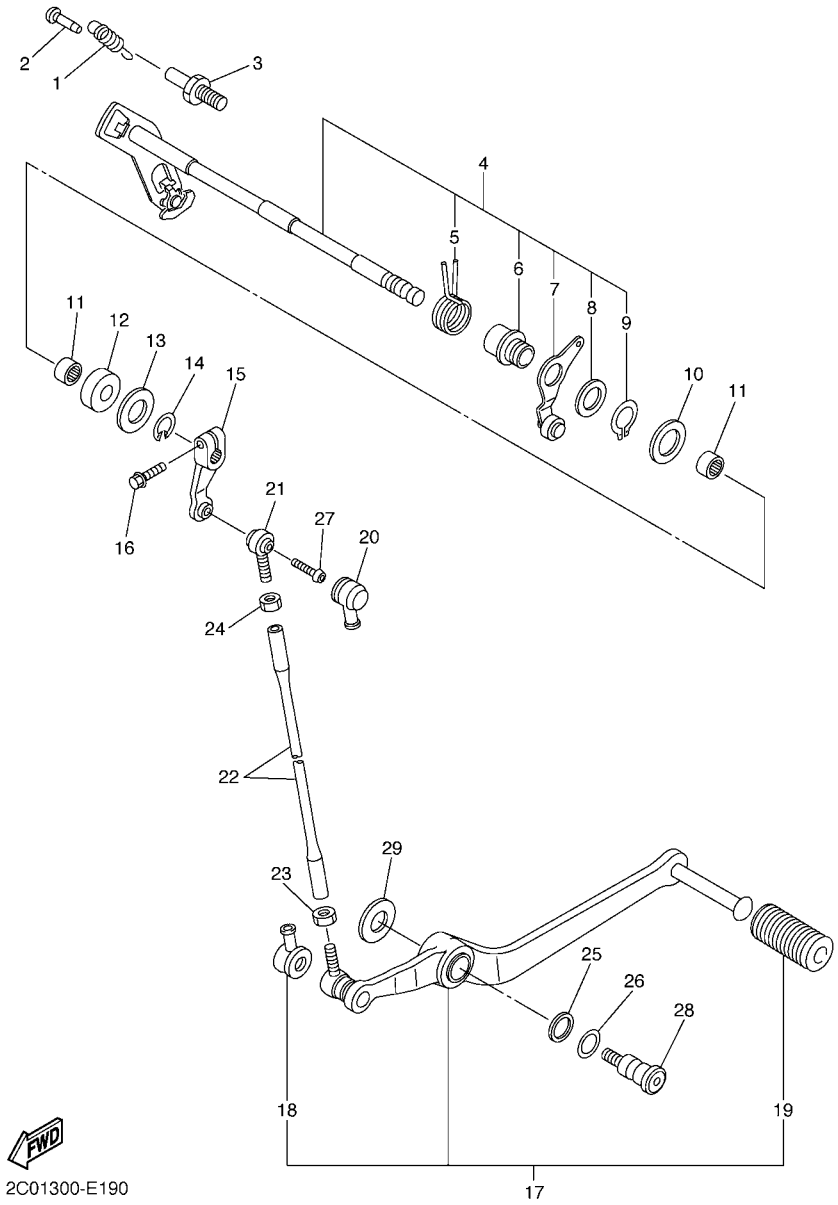

FIG. 19 EJE DE CAMBIO & PEDAL

REF. Nº	CODIGO Nº	DESCRIPCION	13S1					OBSERVACIONES
28	4BP–27434–01	PERNO	1					
29	90201–08784	ARANDELA PLANA	1					

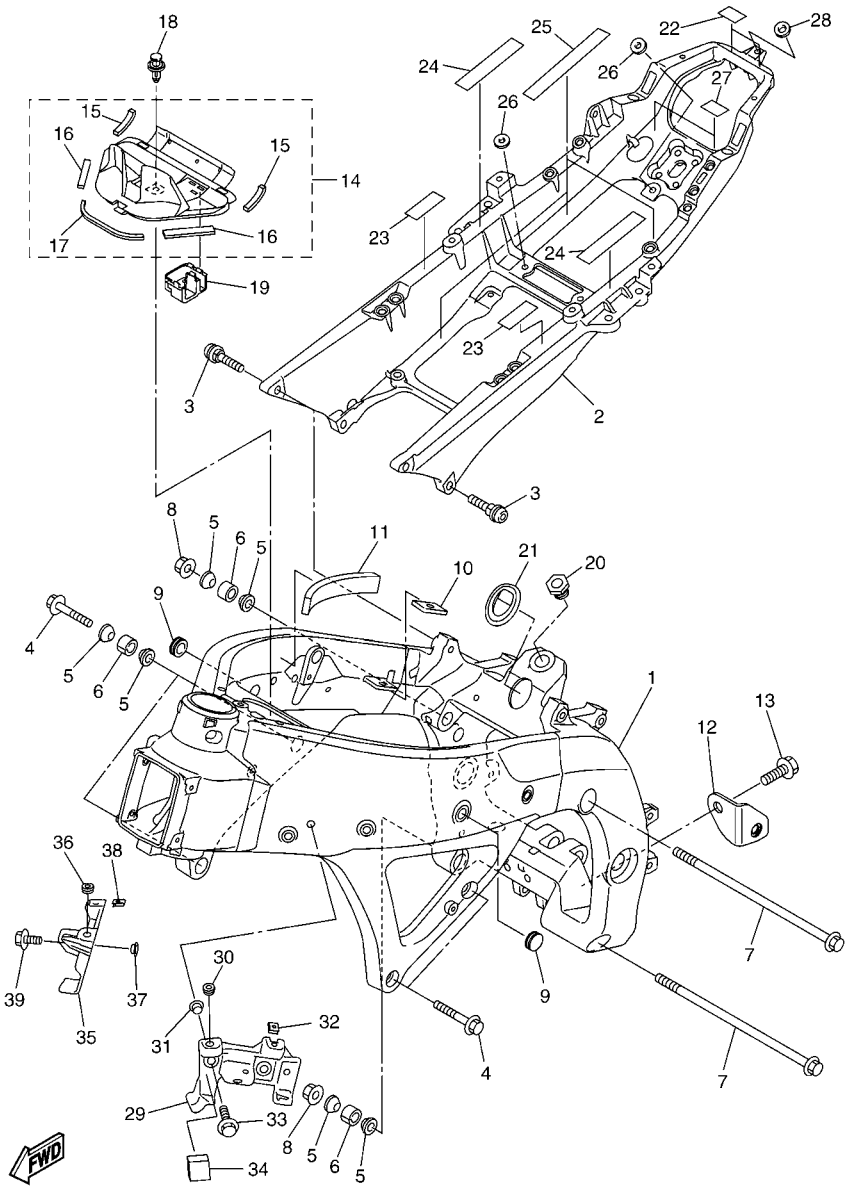

FIG. 20 CUADRO

REF. Nº	CODIGO Nº	DESCRIPCION	13S1					OBSERVACIONES
1	13S–21110–00	ARMAZON COMPLETO	1					
2	13S–21190–00	CUADRO TRASERO COMPLETA	1					
3	13S–2585H–00	TORNILLO	1					
4	95024–10040	PERNO, DE BRIDA	4					
5	13S–21414–00	COPA DE MONTANTE DE MOTOR	8					
6	13S–21424–00	COPA DE MONTANTE DE MOTOR	4					
7	90105–12228	TORNILLO	2					
8	90179–12248	TUERCA	2					
9	90338–15004	TAPON	2					
10	2C0–24182–00	AMORTIGUADOR DE MONTAJE 2	2					
11	2C0–21486–00	AMORTIGUADOR 2	2					
12	13S–21435–00	SOPORTE DE SILENCIADOR	1					
13	90105–08171	TORNILLO	1					
14	13S–2110M–00	CUBIERTA COMPLETO 1	1					
15	13S–2174X–00	.AMORTIGUADOR	2					
16	2C0–2174Y–00	.AMORTIGUADOR	2					
17	2C0–21746–00	.AMORTIGUADOR	1					
18	90269–07010	REMACHE	1					
19	2C0–8258J–00	CAJA DE CONECTOR 1	1					
20	2C0–22241–00	PERNO 1	1					
21	2C0–21279–00	TAPON CIEGO	1					
22	2C0–21566–00	CINTA	2					
23	2C0–21567–00	CINTA	2					
24	13S–21566–00	CINTA	2					
25	13S–21567–00	CINTA	4					
26	13S–2111D–00	SELLO 1	3					
27	2C0–21566–00	CINTA	2					

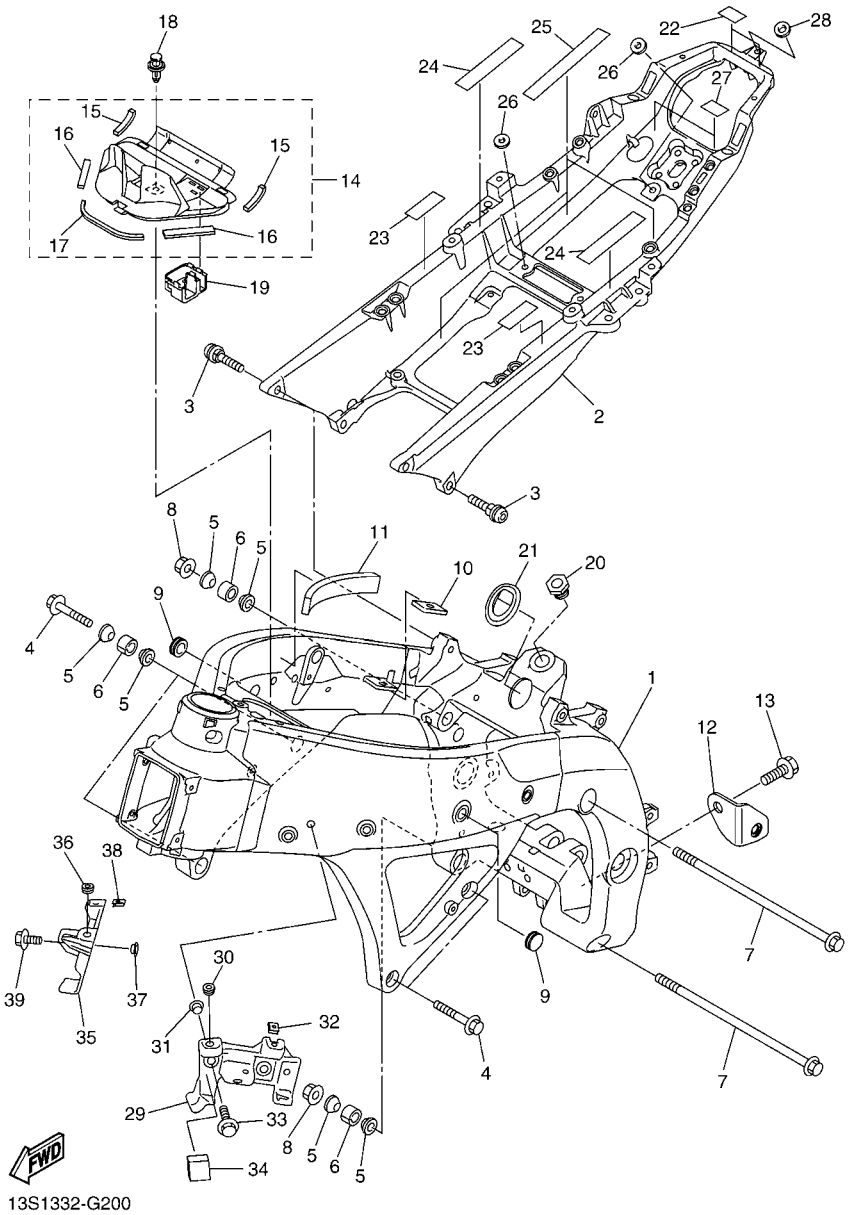

FIG. 20 CUADRO

REF. Nº	CODIGO Nº	DESCRIPCION	13S1					OBSERVACIONES
28	13S–21746–00	AMORTIGUADOR	1					
29	13S–2833A–00	MENSULA7	1					
30	90480–10003	TAPON	1					
31	90387–06048	ESPACIADOR	2					
32	90183–05076	TUERCA DE RESORTE	1					
33	95802–06020	TORNILLO DE REBORDE	2					
34	13S–12679–00	AMORTIGUADOR DE CUBIERTA 6	1					
35	13S–2833E–00	SOPORTE 8	1					
36	90480–10003	TAPON	1					
37	90387–06048	ESPACIADOR	2					
38	90183–05076	TUERCA DE RESORTE	1					
39	95802–06020	TORNILLO DE REBORDE	2					

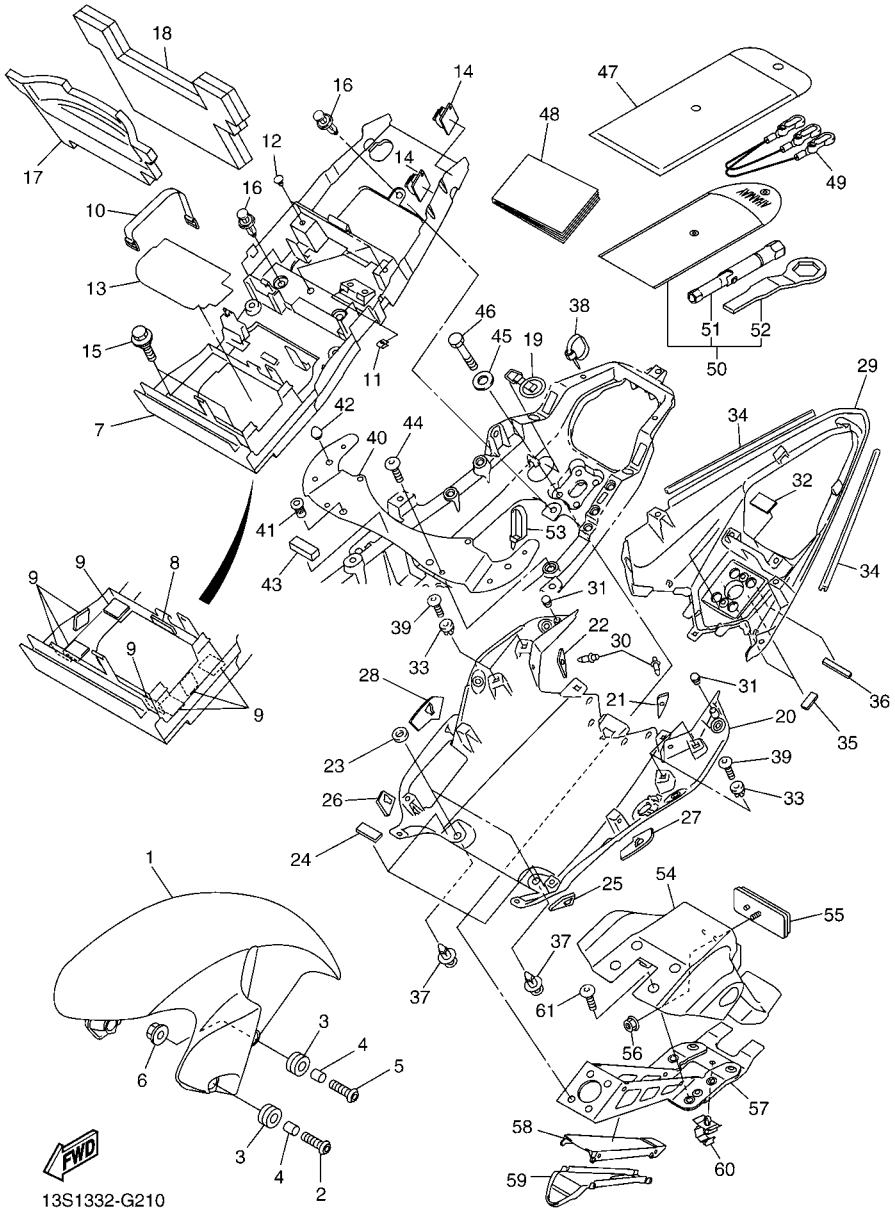

FIG. 21 GUARDABARRO

REF. Nº	CODIGO Nº	DESCRIPCION	13S1					OBSERVACIONES
1	2C0–21511–00–P0	GUARDABARRO DELANTERO	1					UR PARA DPBMC
	2C0–21511–00–P1	GUARDABARRO DELANTERO	1					UR VRC1 PARA BWC1
	2C0–21511–00–P5	GUARDABARRO DELANTERO	1					UR PARA DNMG
2	90111–06043	TORNILLO	2					
3	90480–14003	TAPON	4					
4	90387–06057	ESPACIADOR	4					
5	90111–06030	TORNILLO	2					
6	95702–06500	TUERCA DE REBORDE	2					
7	13S–8212B–00	CAJA DE BATERIA	1					
8	51Y–21639–00	AMORTIGUADOR 2	1					
9	13S–21649–00	AMORTIGUADOR	8					
10	133–82131–00	TIRANTE DE BATERIA	1					
11	90183–04039	TUERCA DE RESORTE	2					
12	90338–06018	TAPON	3					
13	13S–821A1–00	ASIENTO	1					
14	90464–13004	BRIDA	2					
15	90109–06171	PERNO	2					
16	90269–07010	REMACHE	3					
17	13S–21652–00	PROTECTOR	1					
18	13S–24140–00	AMORTIGUADOR	1					
19	13S–21376–00	BANDA DE HERRAMIENTA	1					
20	13S–21611–00–P0	GUARDABARRO TRASERO	1					UR PARA DPBMC
	13S–21611–00–P1	GUARDABARRO TRASERO	1					UR PARA BWC1
	13S–21611–00–P2	GUARDABARRO TRASERO	1					UR PARA DNMG
21	13S–2172P–00	ASIENTO	1					
22	13S–2173P–00	ASIENTO	1					
23	13S–21735–00	SELLO 2	2					

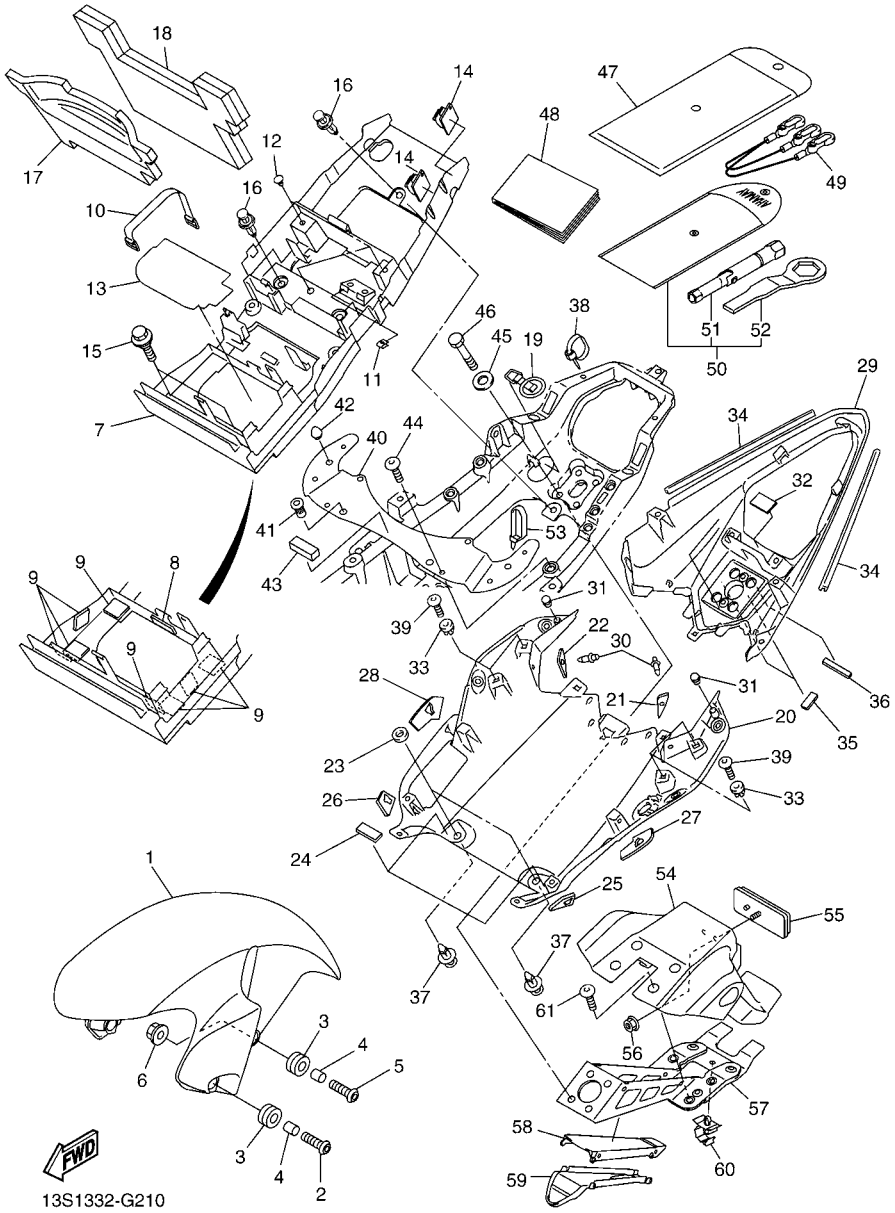

FIG. 21 GUARDABARRO

REF. Nº	CODIGO Nº	DESCRIPCION	13S1					OBSERVACIONES
24	4D9–21717–00	AMORTIGUADOR	2					
25	13S–21669–00	SELLO	1					
26	13S–216A2–00	SELLO 2	1					
27	13S–216A3–00	SELLO 3	1					
28	13S–216A4–00	SELLO 4	1					
29	13S–2162R–00–P0	GUARDABAARRO 2	1					PARA DPBMC
	13S–2162R–00–P1	GUARDABAARRO 2	1					PARA BWC1,DNMG
30	90269–06001	REMACHE	2					
31	90338–06018	TAPON	2					
32	5GM–27445–00	PLACE 1	1					
33	90480–08005	TAPON	4					
34	13S–21732–00	SELLO 1	2					
35	13S–21575–00	SELLO 1	2					
36	13S–2173N–00	SELLO 4	2					
37	90269–07010	REMACHE	2					
38	90464–13073	BRIDA	1					
39	97702–50014	TORNILLO ROSCA HEMBRA	4					
40	13S–21131–00	SOPORTE	1					
41	90179–06010	TUERCA	2					
42	4G0–21639–00	AMORTIGUADOR 2	2					
43	5YT–24665–00	AMORTIGUADOR	1					
44	90111–06104	TORNILLO	4					
45	13S–21615–00	ARANDELA ESPECIAL 1	4					
46	90101–06025	TORNILLO	4					
47	2C0–28100–00	JUEGO DE HERRAMIENTAS	1					
48	13S–28199–S0	MANUAL DEL PROPRIETARIO	1					
49	2C0–21370–00	PORTACASCO COMPLETO	1					

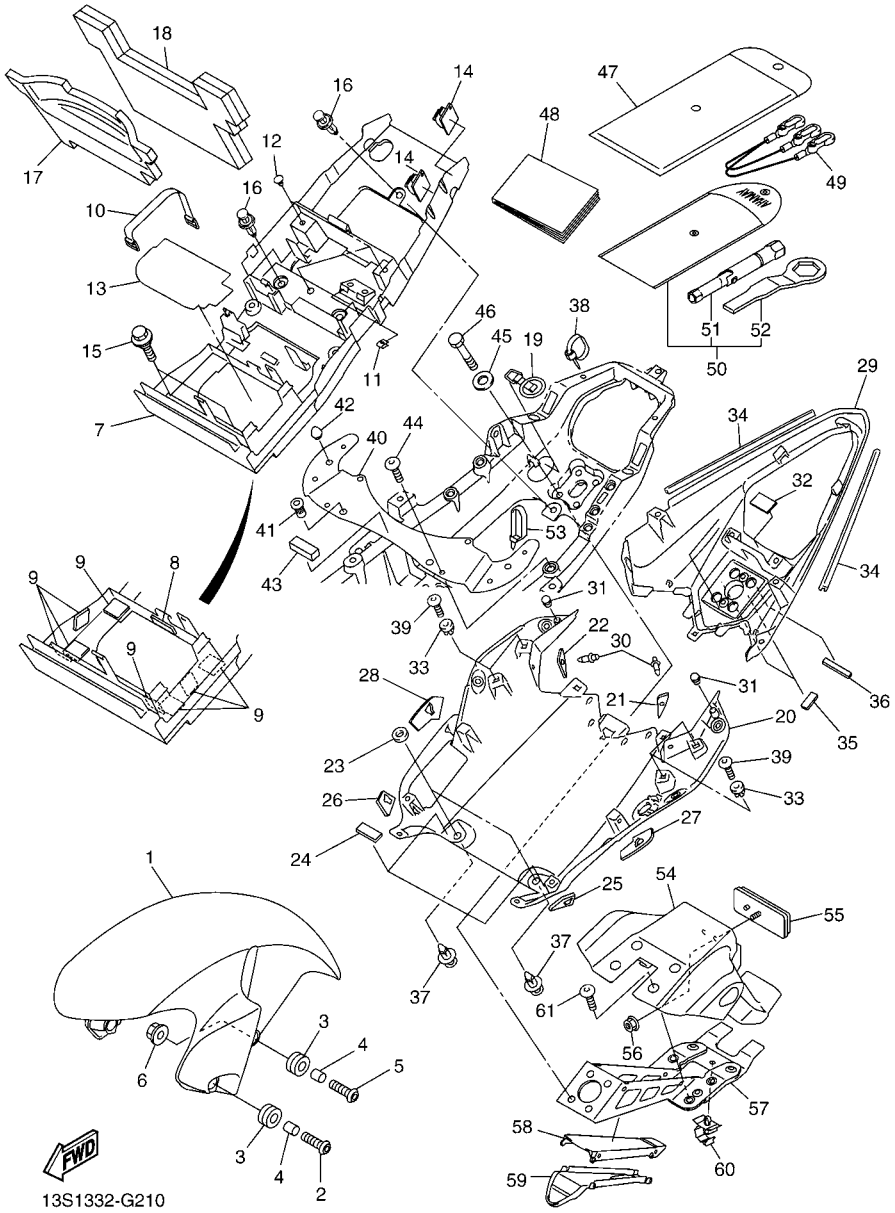

FIG. 21 GUARDABARRO

REF. Nº	CODIGO Nº	DESCRIPCION	13S1					OBSERVACIONES
50	2C0–28110–00	JUEGO DE HERRAMIENTAS, 2	1					
51	4XV–2814F–00	.CAJA	1					
52	4FM–28135–00	.LLAVE DE TUERCAS	1					
53	90465–13M11	BRIDA	1					
54	2C0–21629–00	GUARDABARRO INFERIOR	1					
55	3Y6–85130–02	REFLECTOR TRASERO COMPLETO	1					
56	95607–05200	TUERCA DE AUTO-CIERRE	1					
57	13S–21640–00	SOPORTE TRASERO COMPLETO	1					
58	2C0–2163A–00	CUBIERTA TRAS GUARDABARRO 1	1					
59	2C0–2163E–00	CUBIERTA TRAS GUARDABARRO 2	1					
60	90464–14228	BRIDA	1					
61	90109–06182	PERNO	4					

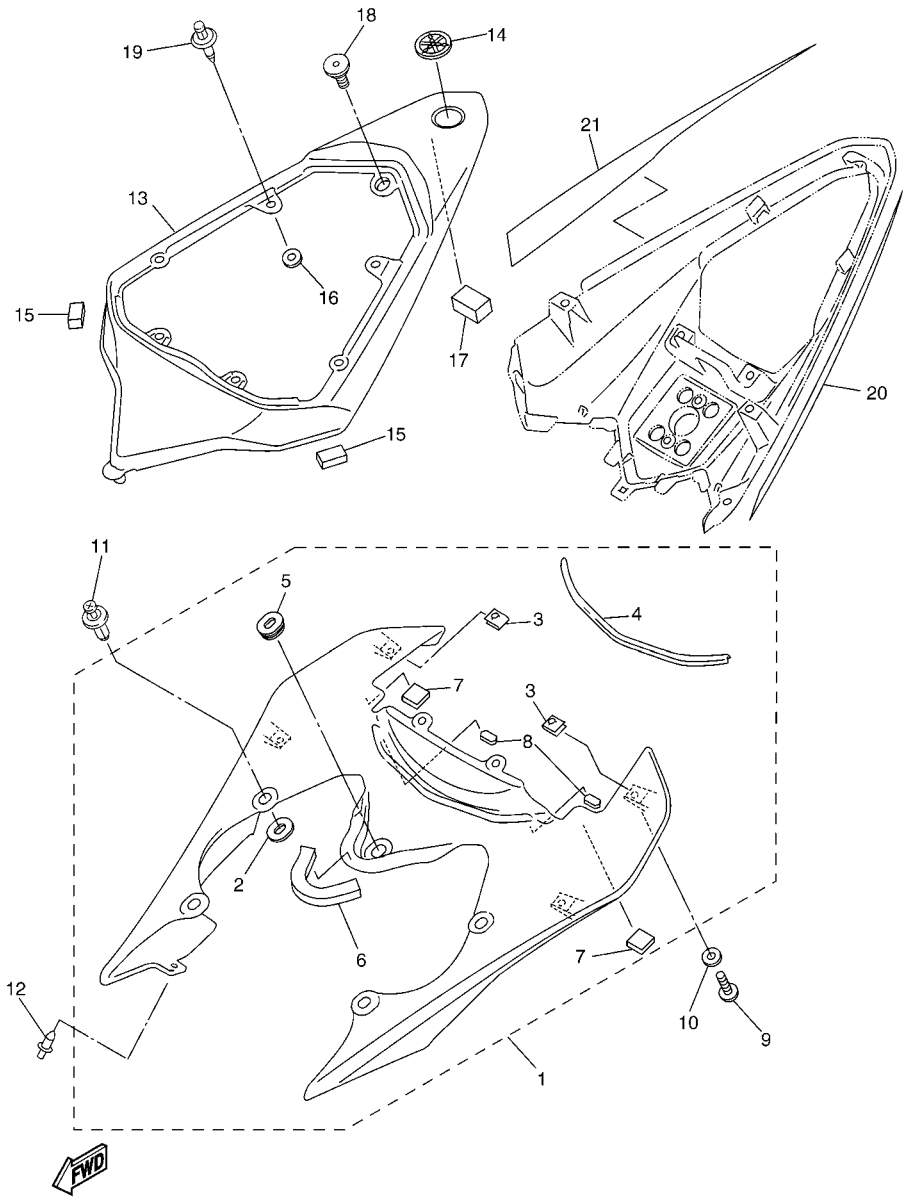

13S1300-G220

FIG. 22 CUBIERTA LATERAL

REF. Nº	CODIGO Nº	DESCRIPCION	13S1					OBSERVACIONES
1	13S–21710–00–P0	CUBIERTA LATERAL COMPLETA 1	1					UR PARA DPBMC
	13S–21710–00–P1	CUBIERTA LATERAL COMPLETA 1	1					UR PARA BWC1
	13S–21710–00–P2	CUBIERTA LATERAL COMPLETA 1	1					UR PARA DNMG
2	5PW–2174X–00	.AMORTIGUADOR	4					
3	90183–05076	.TUERCA DE RESORTE	4					
4	13S–2171L–00	.MUELLE , CUBIERTA LATERAL 1	1					
5	90480–01558	.TAPON	1					
6	2C0–28237–00	.AMORTIGUADOR 3	1					
7	1UF–15379–00	.SELLO	2					
8	5SL–28416–00	.AMORTIGUADOR 2	2					
9	90111–05003	TORNILLO	4					
10	90202–05180	ARANDELA DE PLANA	4					
11	90269–07076	REMACHE	4					
12	90269–06008	REMACHE	2					
13	13S–21720–00–P0	CUBIERTA LATERAL COMPLETA 2	1					PARA DPBMC
	13S–21720–00–P1	CUBIERTA LATERAL COMPLETA 2	1					PARA BWC1,DNMG
14	4KN–2836B–10	MARCA	1					
15	13S–21639–00	AMORTIGUADOR 2	2					
16	5SL–84753–00	AMORTIGUADOR	2					
17	4J2–21778–00	AMORTIGUADOR DE MONTAJE	1					
18	90109–06248	PERNO	1					
19	90269–06001	REMACHE	6					
20	13S–2173E–00	GRAFICO 1	1					PARA DPBMC
21	13S–2173F–00	GRAFICO 2	1					PARA DPBMC

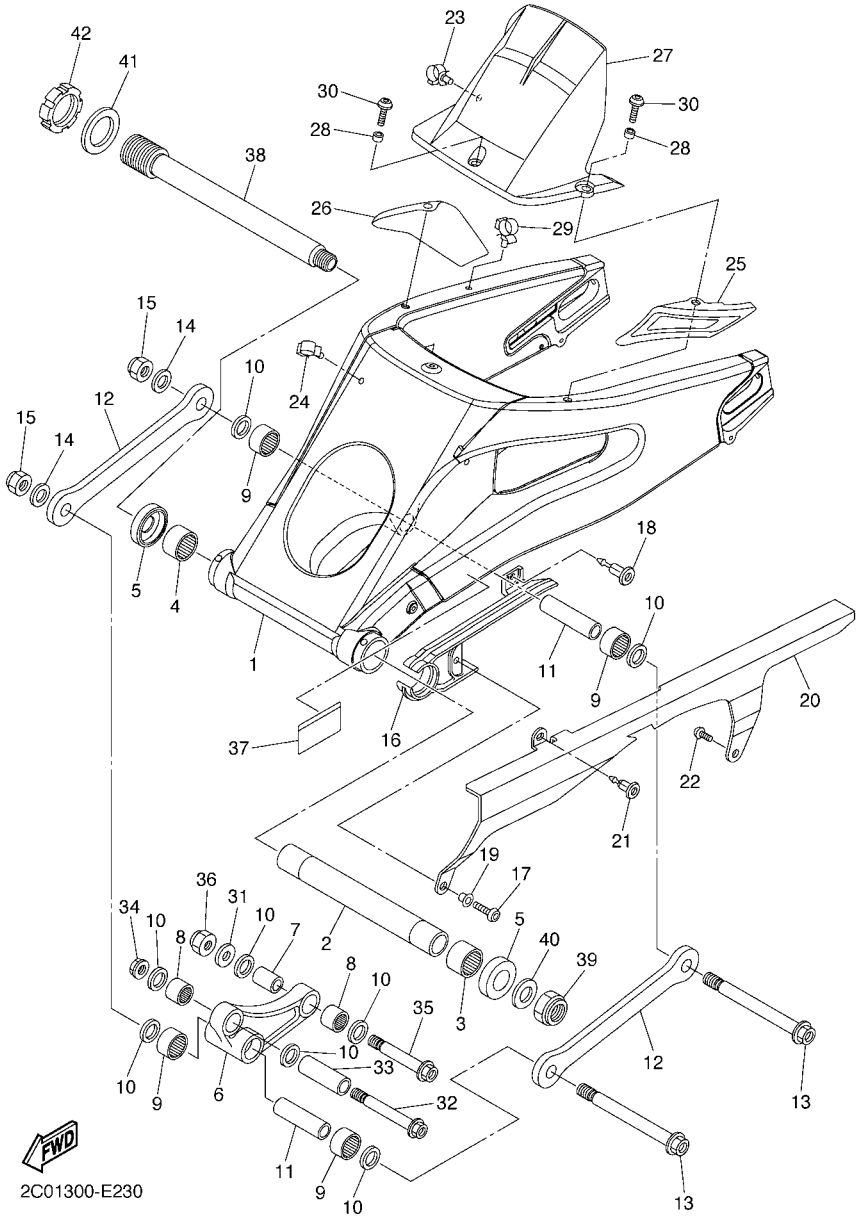

FIG. 23 BRAZO TRASERO

REF. Nº	CODIGO Nº	DESCRIPCION	13S1					OBSERVACIONES
1	13S–22110–00	BRAZO TRASERO COMPLETO	1					
2	2C0–22184–00	BUJE	1					
3	93317–330A0	COJINETE	1					
4	93317–330A1	COJINETE	1					
5	2C0–22128–00	TAPA DE EMPIJE 1	2					
6	2C0–2217A–00	BRAZO REEURIO	1					
7	90387–127W0	ESPACIADOR	1					
8	93315–31759	COJINETE DE RODILLOS	2					
9	93315–31758	COJINETE DE RODILLOS	4					
10	93109–17071	SELLO ACEITE	8					
11	90387–126Y1	ESPACIADOR	2					
12	2C0–2217M–00	BRAZO 1	2					
13	90109–12010	PERNO	2					
14	92902–12600	ARANDELA	2					
15	90185–12119	TUERCA AUTOBLOCANTE	2					
16	2C0–22151–00	SELLO DE GUARDA	1					
17	92012–06016	PERNO	1					
18	90269–07008	REMACHE	1					
19	90387–062X0	ESPACIADOR	1					
20	2C0–22311–00	CABRECADENA	1					
21	90269–07007	REMACHE	1					
22	90110–06102	TORNILLO ALLEN	1					
23	90464–16012	BRIDA	1					
24	90464–16011	BRIDA	1					
25	2C0–228A0–00	CUBIERTA COMPLETO 1	1					
26	2C0–228B0–00	CUBIERTA COMPLETO 2	1					
27	2C0–21650–00	GUARDABARRO TRANSERO COMP.	1					

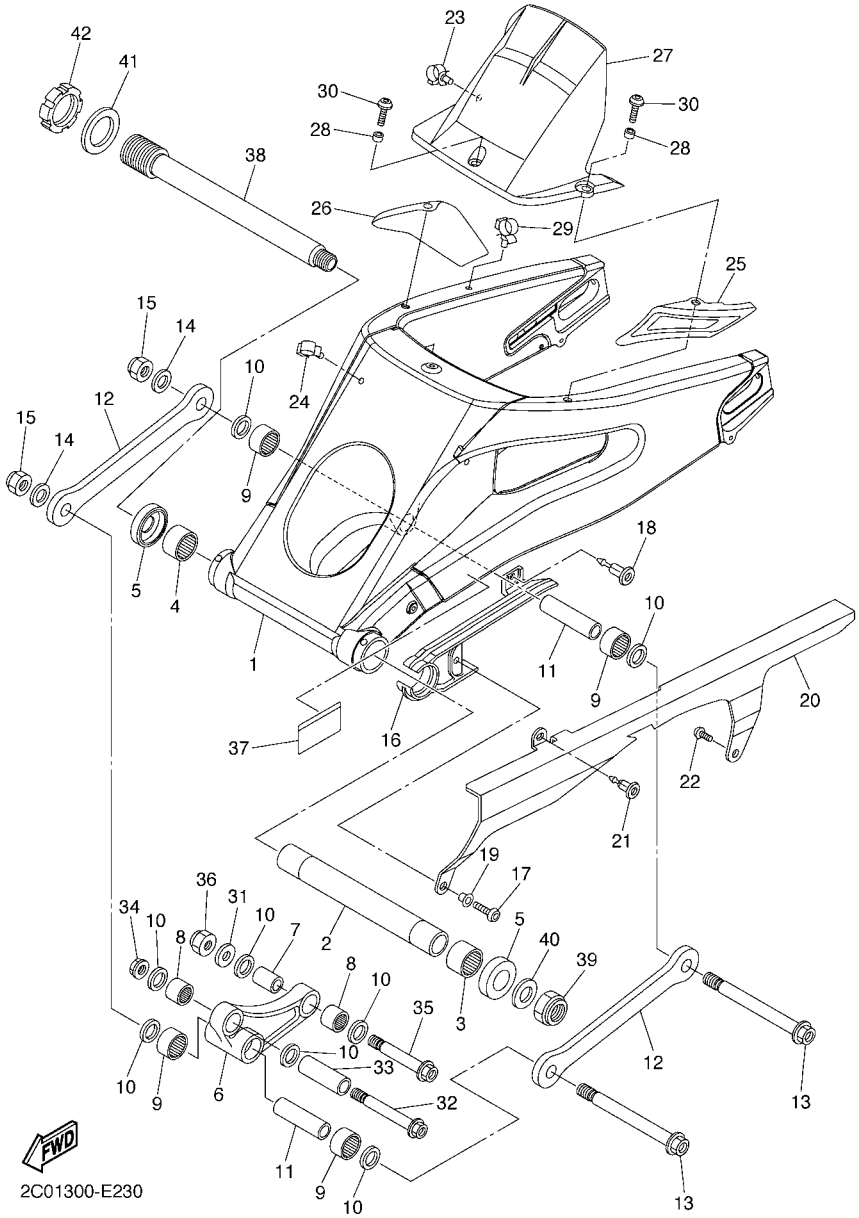

FIG. 23 BRAZO TRASERO

REF. Nº	CODIGO Nº	DESCRIPCION	13S1					OBSERVACIONES
28	90387–06022	ESPACIADOR	3					
29	90464–16012	BRIDA	1					
30	90111–06038	TORNILLO	3					
31	92902–12600	ARANDELA	1					
32	90109–10017	PERNO	1					
33	90387–1012B	ESPACIADOR	1					
34	95602–10200	TUERCA DE AUTO-CIERRE	1					
35	90109–12011	PERNO	1					
36	90185–12119	TUERCA AUTOBLOCANTE	1					
37	5VY–21668–00	ETIQUETA DE FRANJA	1					
38	2C0–22141–10	EJE DEL BARCULANTE	1					
39	90185–22002	TUERCA AUTOBLOCANTE	1					
40	90201–22014	ARANDELA PLANA	1					
41	90201–33014	ARANDELA PLANA	1					
42	2C0–22252–00	TUERCA	1					

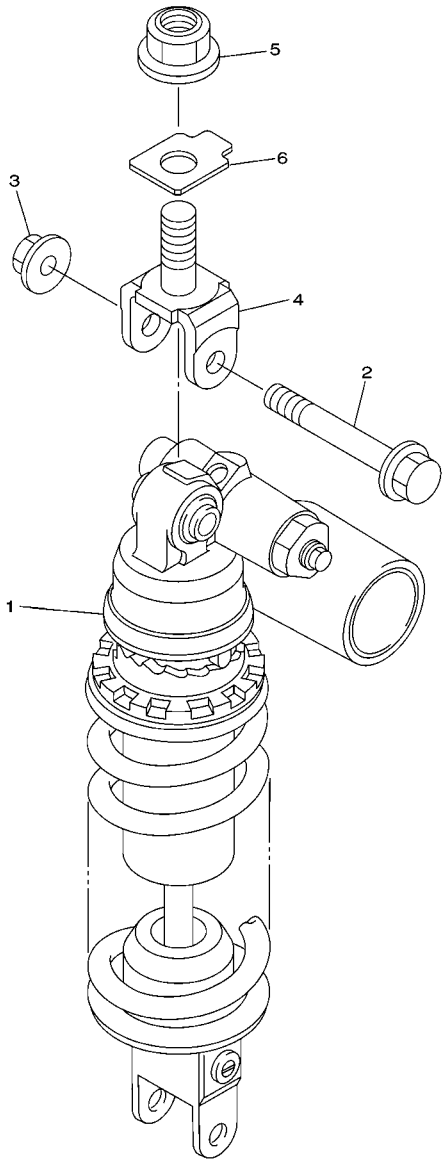

13S1300-G240

FIG. 24 SUSPENSION TRASERO

REF. Nº	CODIGO Nº	DESCRIPCION	13S1					OBSERVACIONES
1	13S–22210–00	AMORTIGUADOR TRASERO COMPLETO	1					UR PARA DPBMC
	13S–22210–10	AMORTIGUADOR TRASERO COMPLETO	1					UR PARA BWC1,DNMG
2	90105–10017	TORNILLO	1					
3	95602–10200	TUERCA DE AUTO-CIERRE	1					
4	13S–22219–00	SOPORTE SUPERIOR	1					
5	95602–14200	TUERCA DE AUTO-CIERRE	1					
6	13S–22243–00	ARANDELA 1	1					

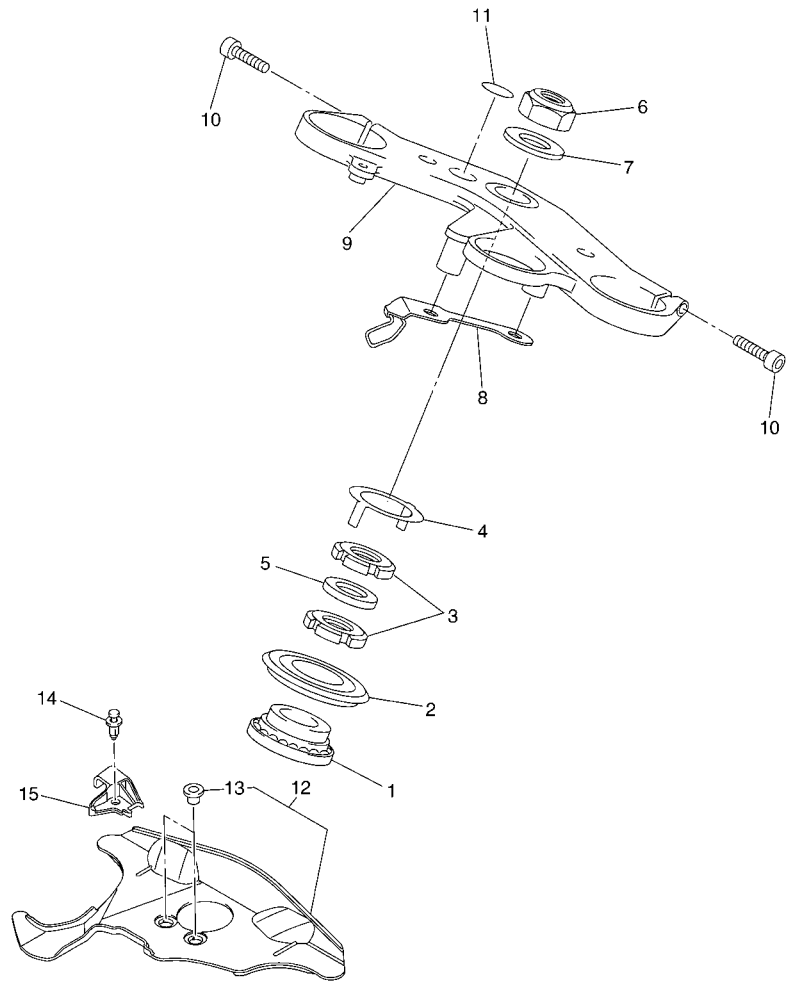

13S1300-G250

FIG. 25 DIRECCION

REF. Nº	CODIGO Nº	DESCRIPCION	13S1					OBSERVACIONES
1	93399–99932	COJINETE	1					
2	4XV–23415–01	CUBIERTA DE PISTA DE BOLAS 1	1					
3	90179–30691	TUERCA	2					
4	4XV–23418–00	ARANDELA ESPECIAL	1					
5	90202–30235	ARANDELA DE PLANA	1					
6	90170–28419	TUERCA	1					
7	90201–281U8	ARANDELA PLANA	1					
8	2C0–23389–00	GUIA DE CABLE	1					
9	13S–23435–00	PLATINA SUPERIOR	1					
10	91314–08030	PERNO	2					
11	4XV–2341B–00	EMBLEMA	1					
12	13S–23808–00	CUBIERTA COMPLETO	1					
13	90387–06048	.ESPACIADOR	2					
14	90269–07001	REMACHE	1					
15	13S–26279–00	GUIA DE CABLE	1					

FIG. 26 HORQUILLA DELANTERA

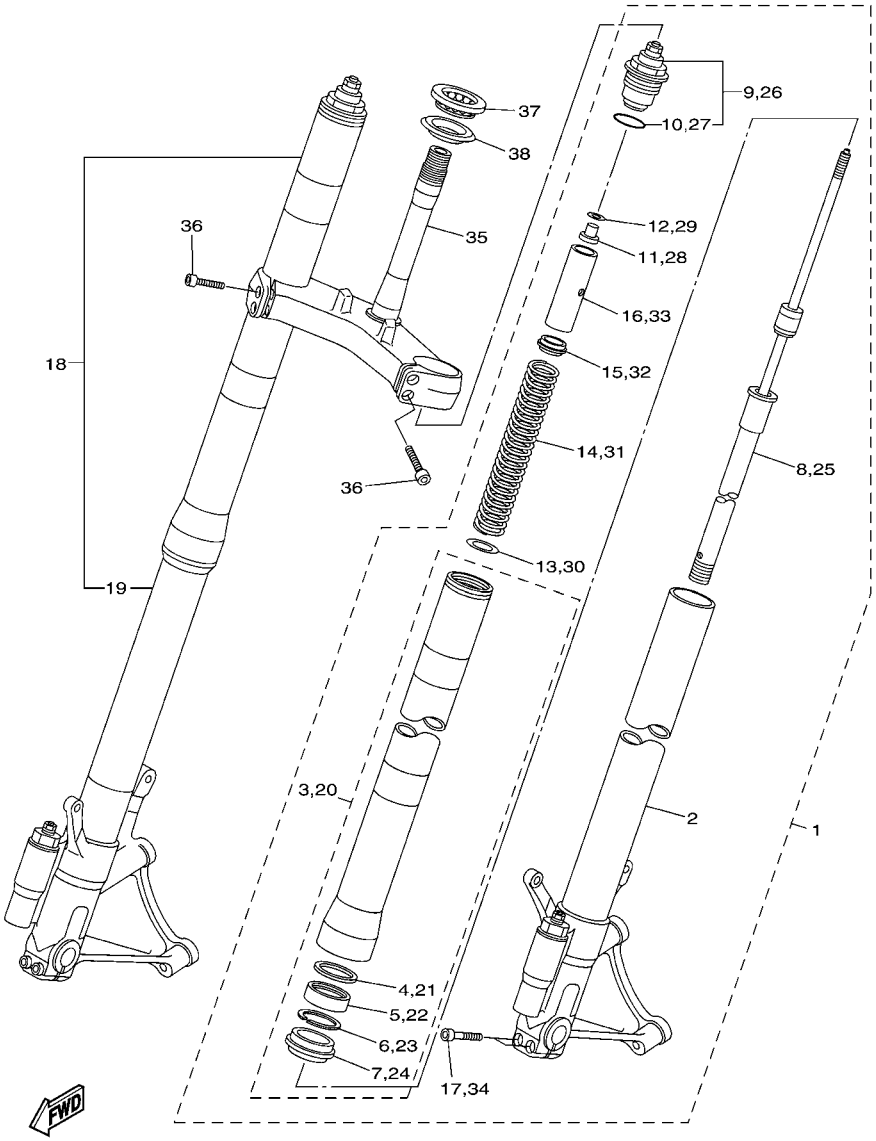

13S1300-G260

REF. Nº	CODIGO Nº	DESCRIPCION	13S1					OBSERVACIONES
1	13S–23102–00	HORQUILLA DELANTERA COMPL.(MI)	1					UR PARA DPBMC
	13S–23102–10	HORQUILLA DELANTERA COMPL.(MI)	1					UR PARA BWC1,DNMG
2	13S–23110–00	.TUBO INTERIOR COMPLETO 1	1					
3	13S–23106–00	.TUBO EXTERIOR COMPLETO (MI)	1					UR PARA DPBMC
	13S–23106–10	.TUBO EXTERIOR COMPLETO (MI)	1					UR PARA BWC1,DNMG
4	3VD–23115–00	..GUIA DE CUBIERTA SUPERIOR	1					
5	5VU–23145–00	..RETEN DE ACEITE	1					
6	3VD–23156–00	..PRESILLA DEL RETEN DE ACEITE	1					
7	3VD–23144–00	..GUARDAPOLVO	1					
8	13S–23170–00	.CILINDRO COMPL DE HORQ DELANT	1					
9	13S–23111–00	.TAPON	1					
10	93210–41N50	..ANILLO O	1					
11	13S–23393–00	.TUERCA ESPECIAL	1					
12	13S–2332N–00	.PLACA DE VALVULA 2	1					
13	2C0–23143–00	.ASIENTO DE RESORTE INFERIOR	1					
14	13S–23141–00	.RESORTE HORQUILLA DELANT.	1					
15	13S–23142–00	.ASIENTO DEL MUELLE SUPERIOR	1					
16	13S–23118–00	.SEPARADOR	1					
17	91314–08040	.PERNO	2					
18	13S–23103–00	HORQUILLA DELANTERA COMPL.(MD)	1					UR PARA DPBMC
	13S–23103–10	HORQUILLA DELANTERA COMPL.(MD)	1					UR PARA BWC1,DNMG
19	13S–23120–00	.TUBO INTERIOR COMPLETO 2	1					
20	13S–23106–00	.TUBO EXTERIOR COMPLETO (MI)	1					UR PARA DPBMC
	13S–23106–10	.TUBO EXTERIOR COMPLETO (MI)	1					UR PARA BWC1,DNMG
21	3VD–23115–00	..GUIA DE CUBIERTA SUPERIOR	1					
22	5VU–23145–00	..RETEN DE ACEITE	1					
23	3VD–23156–00	..PRESILLA DEL RETEN DE ACEITE	1					

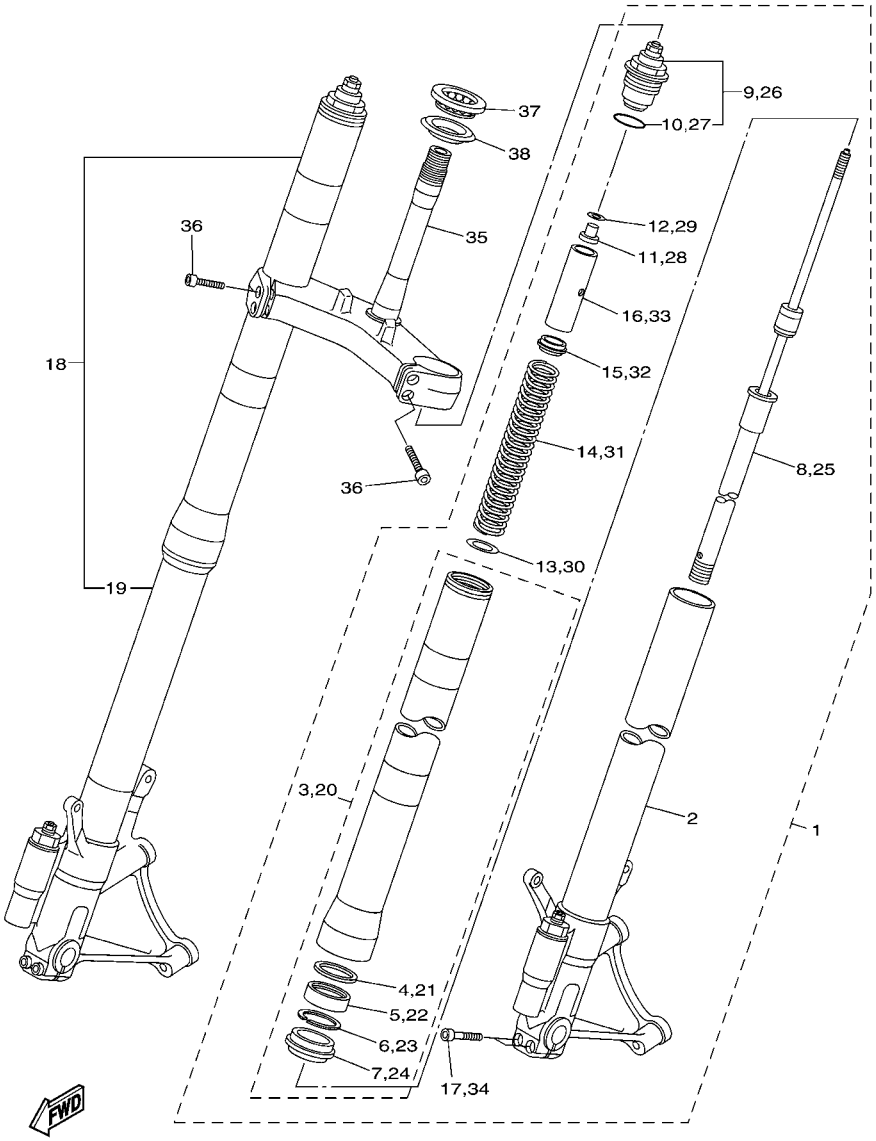

13S1300-G260

FIG. 26 HORQUILLA DELANTERA

REF. Nº	CODIGO Nº	DESCRIPCION	13S1					OBSERVACIONES
24	3VD–23144–00	..GUARDAPOLVO	1					
25	13S–23170–00	.CILINDRO COMPL DE HORQ DELANT	1					
26	13S–23111–00	.TAPON	1					
27	93210–41N50	..ANILLO O	1					
28	13S–23393–00	.TUERCA ESPECIAL	1					
29	13S–2332N–00	.PLACA DE VALVULA 2	1					
30	2C0–23143–00	.ASIENTO DE RESORTE INFERIOR	1					
31	13S–23141–00	.RESORTE HORQUILLA DELANT.	1					
32	13S–23142–00	.ASIENTO DEL MUELLE SUPERIOR	1					
33	13S–23118–00	.SEPARADOR	1					
34	91314–08040	.PERNO	2					
35	13S–23340–00	PLATINA INFERIOR COMPLETA	1					
36	91314–08030	PERNO	4					
37	93399–99957	COJINETE	1					
38	3FV–23462–00	RETEN DE DIRECCION	1					

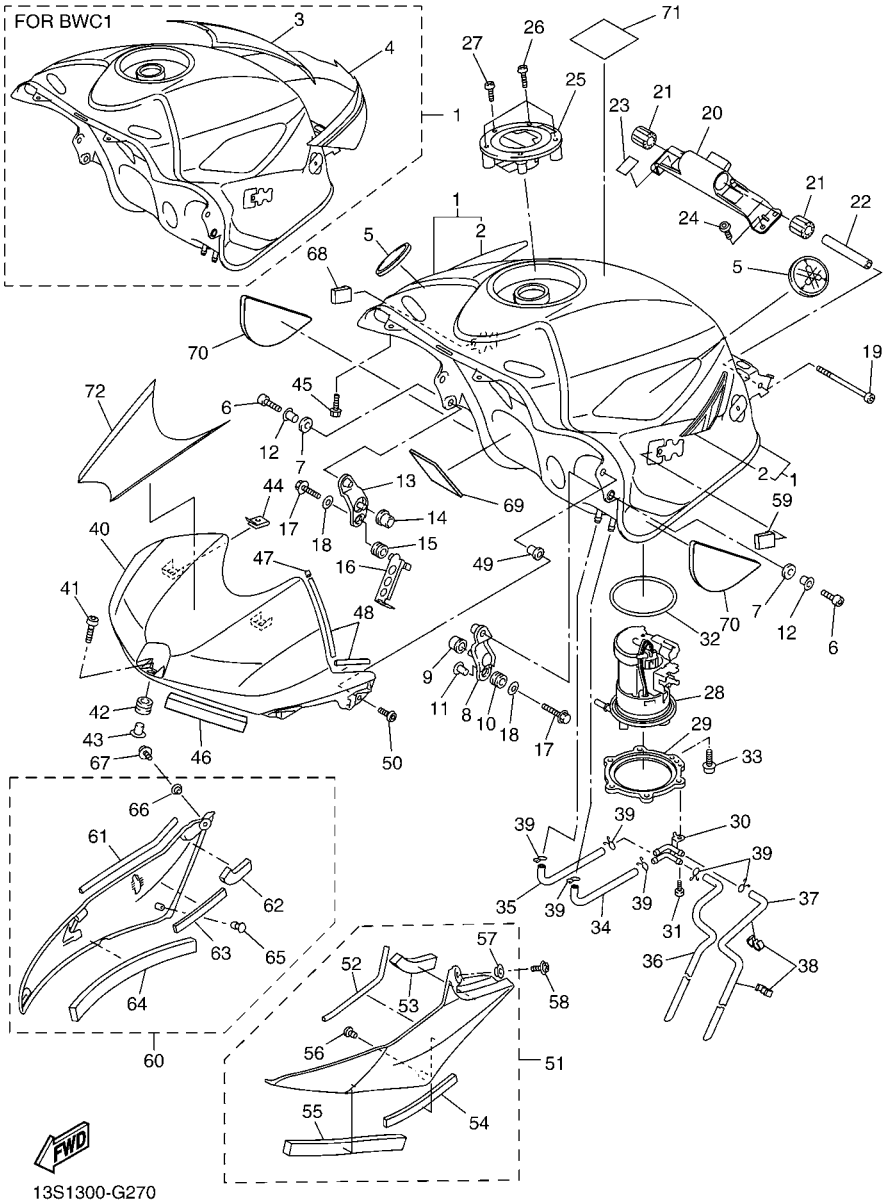

FIG. 27 DEPOSITO DE COMBUSTIBLE

REF. Nº	CODIGO Nº	DESCRIPCION	13S1					OBSERVACIONES
1	13S–Y2410–00–01	DEPOSITO DE COMBUSTIBLE COMP.	1					UR PARA DPBMC
	13S–Y2410–00–02	DEPOSITO DE COMBUSTIBLE COMP.	1					UR PARA BWC1
	13S–YK241–00–P2	DEPOSITO DE COMBUSTIBLE COMP.	1					UR PARA DNMG
2	13S–24240–00	.JUEGO DE CALCOMANIAS	1					PARA DPBMC
3	13S–24245–00	.CALCOMANIA DEPOSITO COMBUST.2	1					PARA BWC1
4	13S–24245–10	.CALCOMANIA DEPOSITO COMBUST.2	1					PARA BWC1
5	5SL–2413B–00	EMBLEMA	2					
6	91312–06016	TORNILLO	2					
7	5VY–24183–00	AMORTIGUADOR DE MONTAJE 3	2					
8	5VY–24191–00	SOPORTE DEPOSITO DE COMBUST.1	1					
9	5VY–24181–00	AMORTIGUADOR DE MONTAJE 1	1					
10	90480–10542	TAPON	1					
11	90387–066Y6	ESPACIADOR	1					
12	90387–06143	ESPACIADOR	2					
13	5VY–24192–00	SOPORTE DE DEPOSITO COMBUST.2	1					
14	5VY–24181–00	AMORTIGUADOR DE MONTAJE 1	1					
15	90480–10542	TAPON	1					
16	2C0–21339–00	GUIA DE CABLE	1					
17	95022–06030	PERNO, DE BRIDA	2					
18	90201–06063	ARANDELA PLANA	2					
19	91312–06090	TORNILLO	1					
20	2C0–2413Y–00	SOPORTE ACCESORIO DE DEPOSITO	1					
21	5SL–24183–00	AMORTIGUADOR DE MONTAJE 3	2					
22	90387–06055	ESPACIADOR	1					
23	2C0–21566–00	CINTA	2					
24	90111–06071	TORNILLO	4					
25	5JJ–24602–00	TAPON COMPLETO	1					

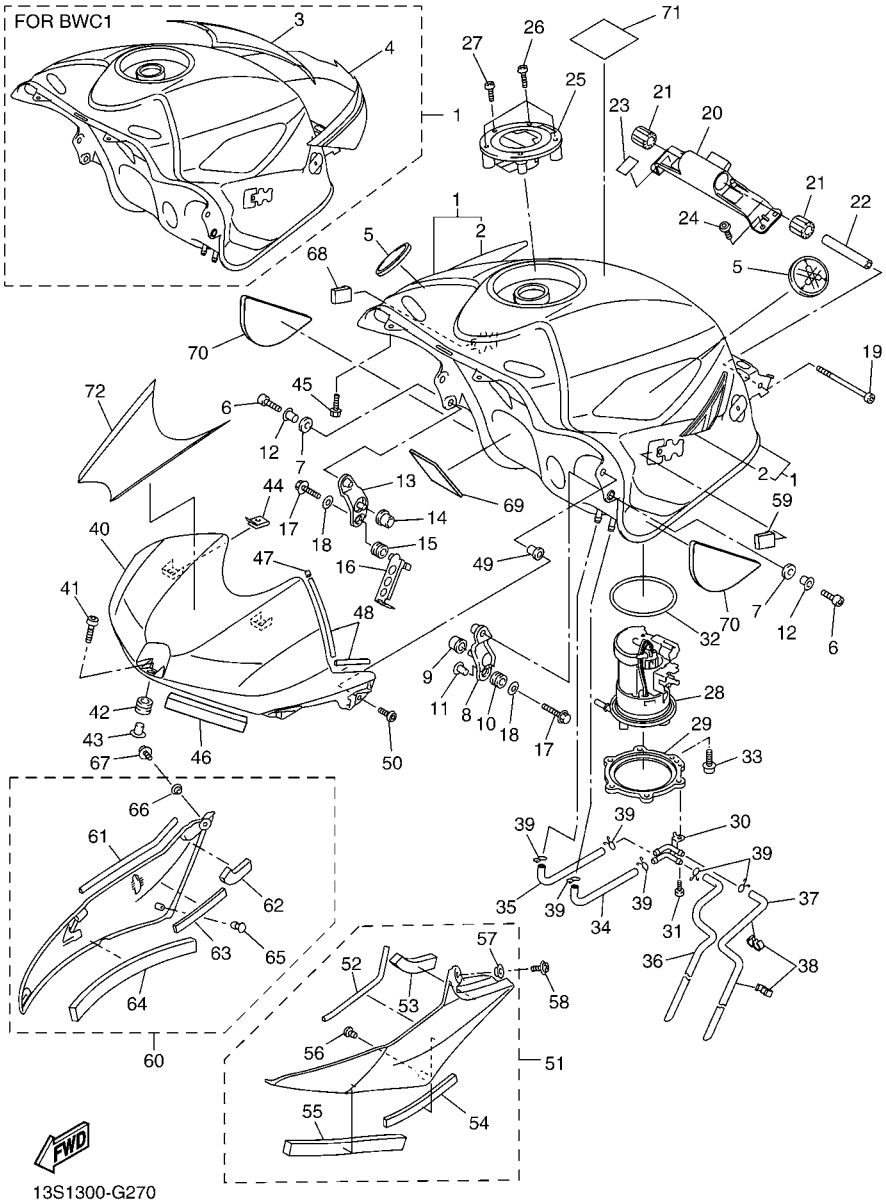

FIG. 27 DEPOSITO DE COMBUSTIBLE

REF. Nº	CODIGO Nº	DESCRIPCION	13S1					OBSERVACIONES
26	90110–05112	TORNILLO ALLEN	3					
27	91312–05010	TORNILLO	1					
28	4C8–13907–00	BOMBA DE COMBUSTIBLE COMPLETA	1					
29	13S–24491–00	SOPORTE BOMBA COMBUSTIBLE	1					
30	13S–24135–00	GRAMPA 1	1					
31	90154–05012	TORNILLO DE LIGAR	1					
32	5JW–24486–00	ANILLO O	1					
33	90110–05028	TORNILLO ALLEN	6					
34	13S–24315–00	TUBO DE DESAGUE	1					
35	13S–24316–00	TUBO 6	1					
36	13S–24317–00	TUBO 7	1					
37	13S–24313–00	TUBO 3	1					
38	90464–09M31	BRIDA	2					
39	90467–09006	PRESILLA	6					
40	13S–2171A–00–P0	CUBIERTA, TECHO	1					UR PARA DPBMC
	13S–2171A–00–P1	CUBIERTA, TECHO	1					UR PARA BWC1
	13S–2171A–00–P2	CUBIERTA, TECHO	1					UR MBL2 PARA DNMG
41	90110–06233	TORNILLO ALLEN	1					
42	90480–12023	TAPON	1					
43	90387–06203	ESPACIADOR	1					
44	90183–05074	TUERCA DE RESORTE	2					
45	90105–05014	TORNILLO	2					
46	2C0–2414J–00	EQUILIBRIO, CUBIERTA	2					
47	13S–24181–00	AMORTIGUADOR DE MONTAJE 1	2					
48	2C0–2414N–00	EQUILIBRIO, CUBIERTA	4					
49	90179–05523	TUERCA	2					
50	98902–05014	TORNILLO DE AJUSTE	2					

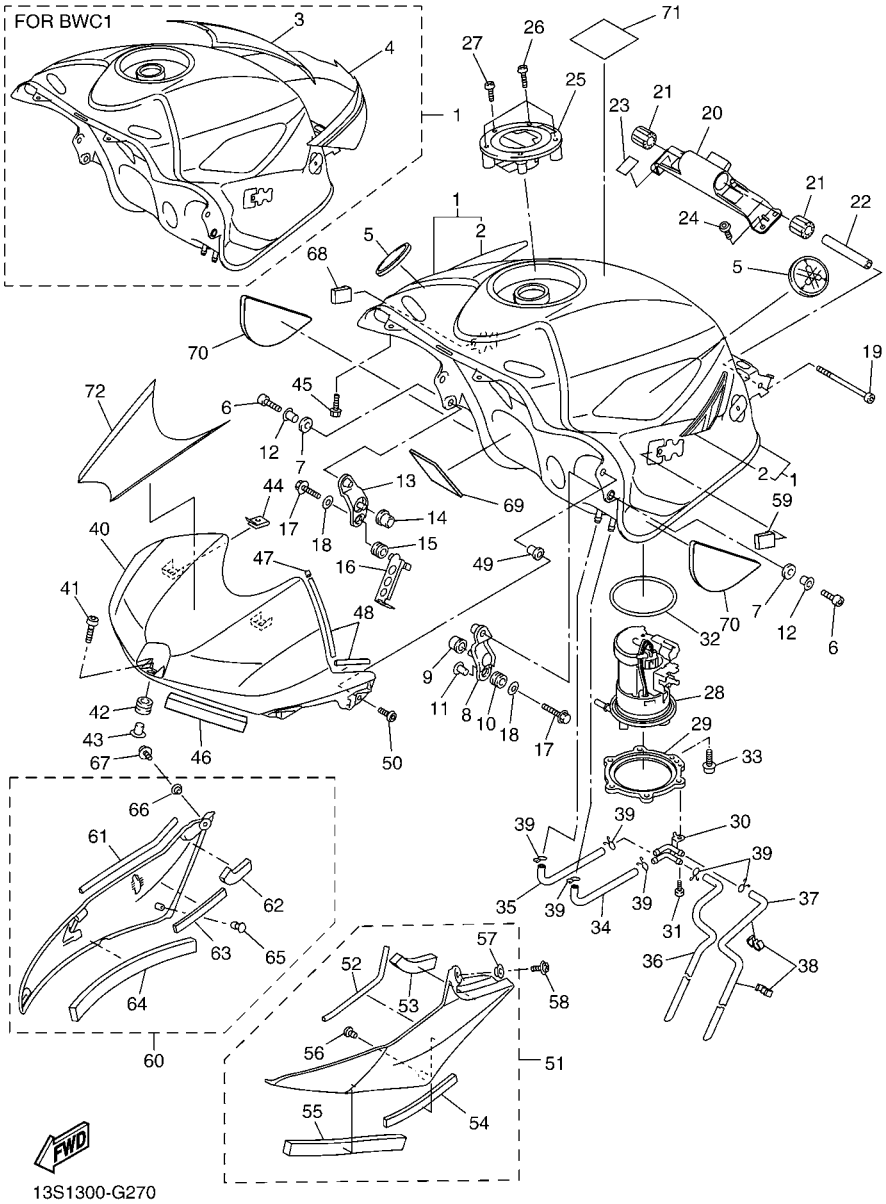

FIG. 27 DEPOSITO DE COMBUSTIBLE

REF. Nº	CODIGO Nº	DESCRIPCION	13S1					OBSERVACIONES
51	13S–24106–00	CUBIERTA LATERAL COMPLETA 1	1					
52	4C8–2414H–00	.EQUILIBRIO, CUBIERTA	1					
53	2C0–2414P–00	.EQUILIBRIO, CUBIERTA	1					
54	4C8–2414J–00	.EQUILIBRIO, CUBIERTA	1					
55	2C0–24184–00	.AMORTIGUADOR DE MONTAJE 4	1					
56	90338–06018	.TAPON	1					
57	90387–05035	.ESPACIADOR	1					
58	98902–05008	TORNILLO DE AJUSTE	1					
59	5PW–2411J–01	AMORTIGUADOR, DE CUBIERTA LAT	1					
60	13S–24108–00	CUBIERTA LATERAL COMPLETA 2	1					
61	4C8–2414H–00	.EQUILIBRIO, CUBIERTA	1					
62	2C0–2414P–00	.EQUILIBRIO, CUBIERTA	1					
63	4C8–2414J–00	.EQUILIBRIO, CUBIERTA	1					
64	2C0–24184–00	.AMORTIGUADOR DE MONTAJE 4	1					
65	90338–06018	.TAPON	1					
66	90387–05035	.ESPACIADOR	1					
67	98902–05008	TORNILLO DE AJUSTE	1					
68	5PW–2411J–01	AMORTIGUADOR, DE CUBIERTA LAT	1					
69	13S–24145–00	AMORTIGUADOR CUBIERTA LATERAL	1					
70	2C0–24145–00	AMORTIGUADOR CUBIERTA LATERAL	2					
71	4C8–21568–00	ETIQUETA DE PRECAUCION	1					
72	13S–24244–00	CALCOMANIA DEPOSITO COMBUST.1	1					PARA BWC1

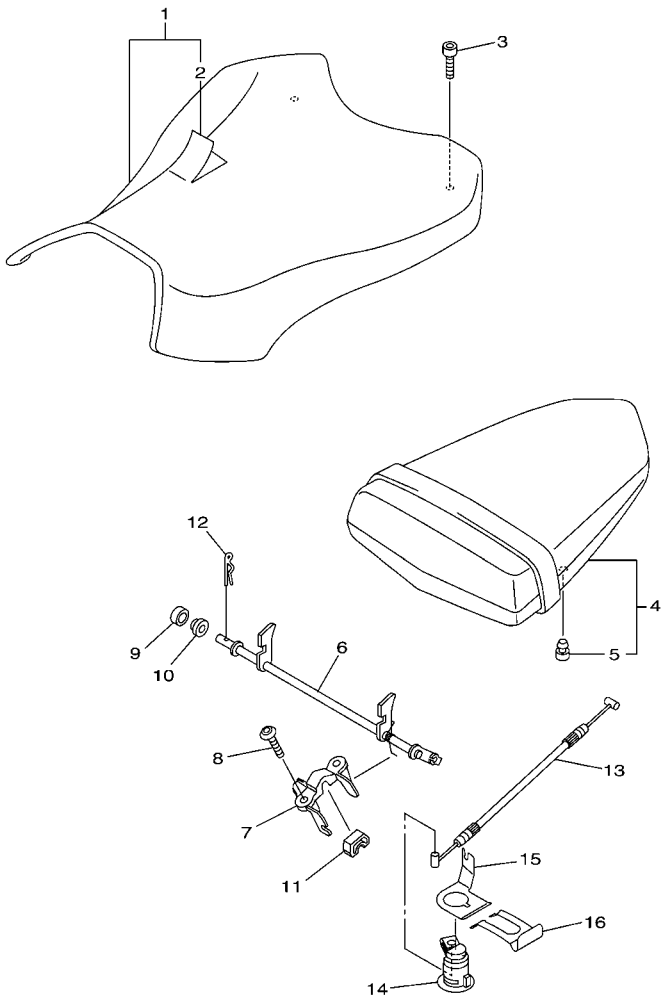

13S1300-G280

FIG. 28 ASIENTO

REF. Nº	CODIGO Nº	DESCRIPCION	13S1					OBSERVACIONES
1	13S–24710–00	ASIENTO SIMPLE COMPLETO	1					PARA DPBMC,DNMG
	13S–24710–10	ASIENTO SIMPLE COMPLETO	1					PARA BWC1
2	13S–24711–00	.CUBIERTA DE ASIENTO SIMPLE	1					PARA DPBMC,DNMG
	13S–24711–10	.CUBIERTA DE ASIENTO SIMPLE	1					PARA BWC1
3	90110–06258	TORNILLO ALLEN	2					
4	13S–24750–00	ASIENTO TANDEM COMPLETO	1					PARA DPBMC,DNMG
	13S–24750–10	ASIENTO TANDEM COMPLETO	1					PARA BWC1
5	5SL–24723–00	.AMORTIGUADOR DE ASIENTO	2					
6	2C0–24780–00	CERRADURA SILLIN COMPLETO	1					
7	2C0–24792–00	PLACA	1					
8	90111–06051	TORNILLO	2					
9	2C0–24825–00	ESPACIADOR DE PORTADOR	1					
10	13S–24725–00	ESPACIADOR 1	1					
11	13S–24847–00	SOSTEN	1					
12	90468–16001	PRESILLA	1					
13	13S–2478E–00	CABLE	1					
14	5VY–W2470–00	JUEGO DE ROTOR	1					
15	5VY–2117K–01	SOPORTE DE CERRADURA	1					
16	5VY–2176V–00	RESORTE, CERRADURA 2	1					

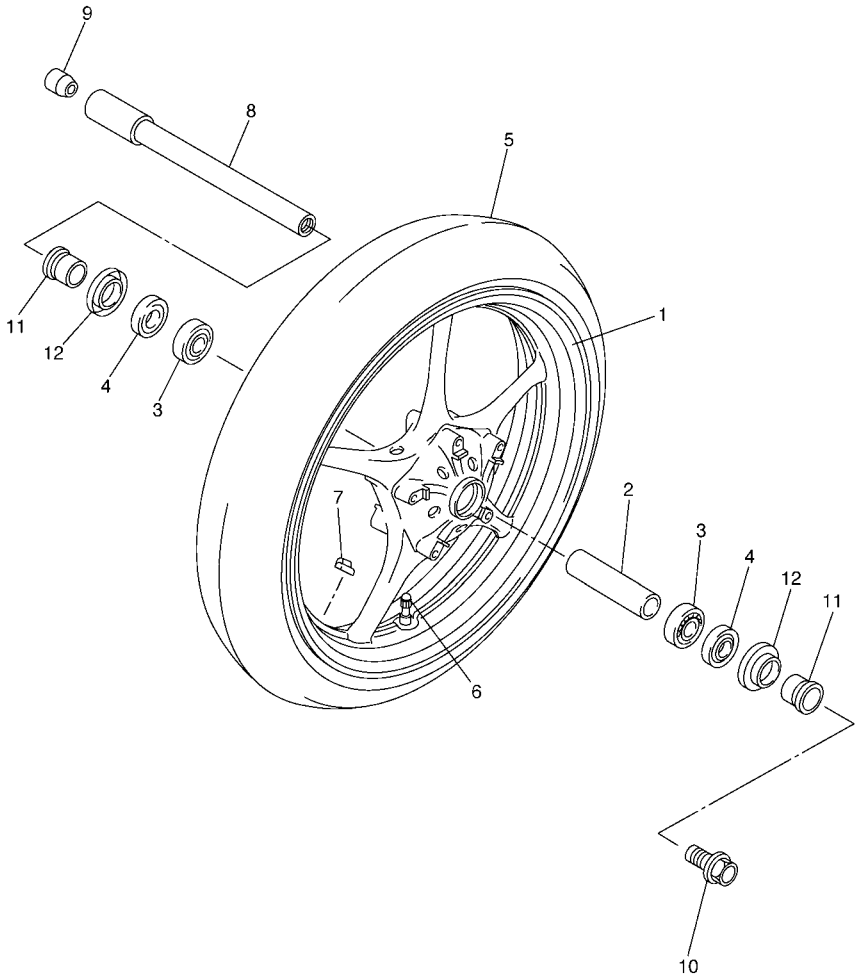

5SLM332-D290

FIG. 29 RUEDA DELANTERA

REF. Nº	CODIGO Nº	DESCRIPCION	13S1					OBSERVACIONES
1	5SL–25168–00–8L	RUEDA FUNDIDA DELANTERA	1					PARA DPBMC
	5SL–25168–00–0X	RUEDA FUNDIDA DELANTERA	1					PARA BWC1,DNMG
2	4XV–25117–00	ESPACIADOR DE COJINETE	1					
3	93306–07208	COJINETE	2					
4	93106–28043	SELLO ACEITE	2					
5	94112–17100	NEUMATICO(120/70ZR17 M/C 58W)	1					BRIDGESTONE
6	93900–00030	VALVULA DE ARO (TR412)	1					TAIHEIYO
7	5MT–25398–00	BALANCEADOR DE RUEDA (10G)	1					UR
	5MT–25398–10	BALANCEADOR DE RUEDA (20G)	1					UR
	5MT–25398–20	BALANCEADOR DE RUEDA (30G)	1					UR
8	2C0–25181–00	EJE DE LA RUEDA	1					
9	5PW–25188–00	TAPA	1					
10	90105–14002	TORNILLO	1					
11	4XV–25186–00	COLLAR DE RUEDA	1					
12	4XV–25118–00	CUBIERTA DE MASA PARA POLVO	1					

FIG. 30 CALIBRE FRENO DELANTERA

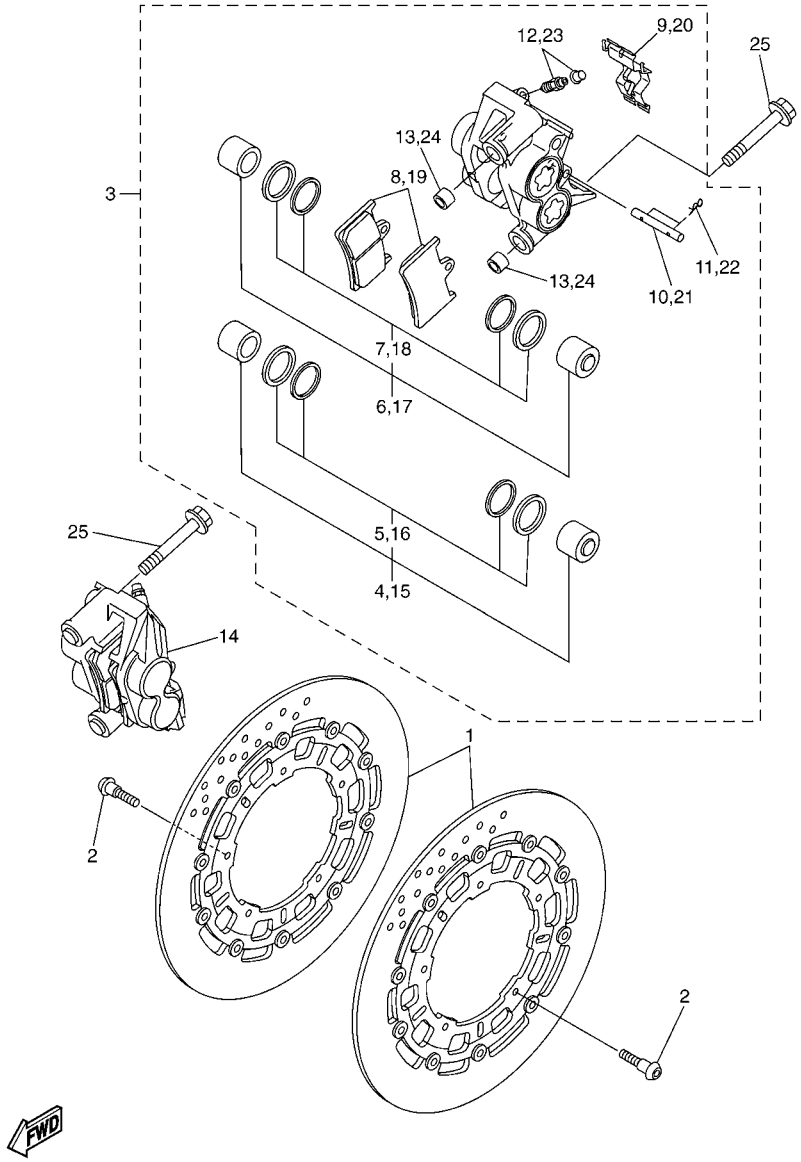

REF. Nº	CODIGO Nº	DESCRIPCION	13S1					OBSERVACIONES
1	13S–2581T–00	DISCO DE FRENO	2					
2	90149–06043	TORNILLO DE REGLAJE	10					
3	13S–2580T–00	CALIBRE COMPLETO (IZQUIERDO)	1					UR PARA DPBMC
	13S–2580T–10	CALIBRE COMPLETO (IZQUIERDO)	1					UR PARA BWC1,DNMG
4	5PW–W0057–10	.PISTON COMPLETO PINZA	1					
5	5PW–W0047–10	..JUEGO DE RETENES DE PINZA	1					
6	5PW–W0057–00	.PISTON COMPLETO PINZA	1					
7	5PW–W0047–00	..JUEGO DE RETENES DE PINZA	1					
8	2C0–W0045–00	.JUEGO DE COJIN DE FRENO	1					
9	13S–25919–00	.SOPORTE DE PASTILLAS	1					
10	4SV–25924–00	.PASADOR	1					
11	3GM–25925–00	.PRESILLA	2					
12	1J3–W0048–00	.CJTO TORNILLO DE PURGA	1					
13	5VY–2583B–00	.PASADOR DE PERILLA	2					
14	13S–2580U–00	CALIBRE COMPLETO (DERECHO)	1					UR PARA DPBMC
	13S–2580U–10	CALIBRE COMPLETO (DERECHO)	1					UR PARA BWC1,DNMG
15	5PW–W0057–10	.PISTON COMPLETO PINZA	1					
16	5PW–W0047–10	..JUEGO DE RETENES DE PINZA	1					
17	5PW–W0057–00	.PISTON COMPLETO PINZA	1					
18	5PW–W0047–00	..JUEGO DE RETENES DE PINZA	1					
19	2C0–W0045–00	.JUEGO DE COJIN DE FRENO	1					
20	13S–25919–00	.SOPORTE DE PASTILLAS	1					
21	4SV–25924–00	.PASADOR	1					
22	3GM–25925–00	.PRESILLA	2					
23	1J3–W0048–00	.CJTO TORNILLO DE PURGA	1					
24	5VY–2583B–00	.PASADOR DE PERILLA	2					
25	90401–10012	PERNO DE UNION	4					

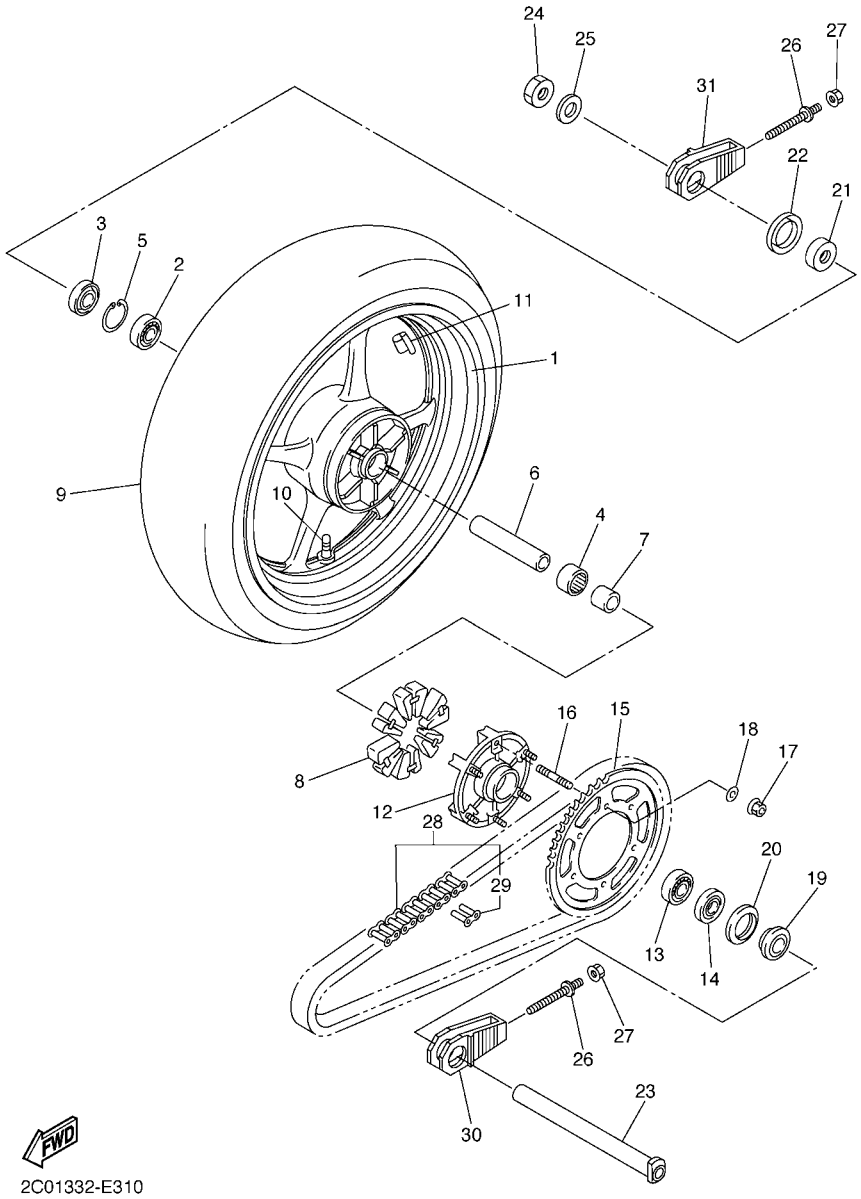

FIG. 31 RUEDA TRASERA

REF. Nº	CODIGO Nº	DESCRIPCION	13S1					OBSERVACIONES
1	5SL–25338–00–8L	RUEDA FUNDIDA TRASERA	1					PARA DPBMC
	5SL–25338–00–0X	RUEDA FUNDIDA TRASERA	1					PARA BWC1,DNMG
2	93306–20531	COJINETE	1					
3	93106–40013	SELLO ACEITE	1					
4	93317–43580	COJINETE	1					
5	93420–61M07	SEGURO	1					
6	4XV–25317–00	ESPACIADOR DE COJINETE	1					
7	5SL–25383–00	COLLAR DE RUEDA	1					
8	2C0–25364–00	AMORTIGUADOR	6					
9	94118–17068	NEUMATICO(180/55 ZR17M/C 73W)	1					BRIDGESTONE
10	93900–00030	VALVULA DE ARO (TR412)	1					TAIHEIYO
11	5MT–25398–00	BALANCEADOR DE RUEDA (10G)	1					UR
	5MT–25398–10	BALANCEADOR DE RUEDA (20G)	1					UR
	5MT–25398–20	BALANCEADOR DE RUEDA (30G)	1					UR
12	5SL–25366–00	EMBRAGUE DE MASA	1					
13	93306–20531	COJINETE	1					
14	93106–40013	SELLO ACEITE	1					
15	2C0–25445–20	CORONA (45T)	1					
16	90116–10485	ESPARRAGO	6					
17	90185–10009	TUERCA AUTOBLOCANTE	6					
18	90201–10021	ARANDELA PLANA	6					
19	5SL–25376–00	COLLAR DE RUEDA	1					
20	5SL–25367–00	CUBIERTA DE MASA PARA POLVO	1					
21	4XV–25376–00	COLLAR DE RUEDA	1					
22	5SL–25327–00	CUBIERTA DE PLACA	1					
23	2C0–25381–10	EJE DE RUEDA	1					
24	90185–24007	TUERCA AUTOBLOCANTE	1					

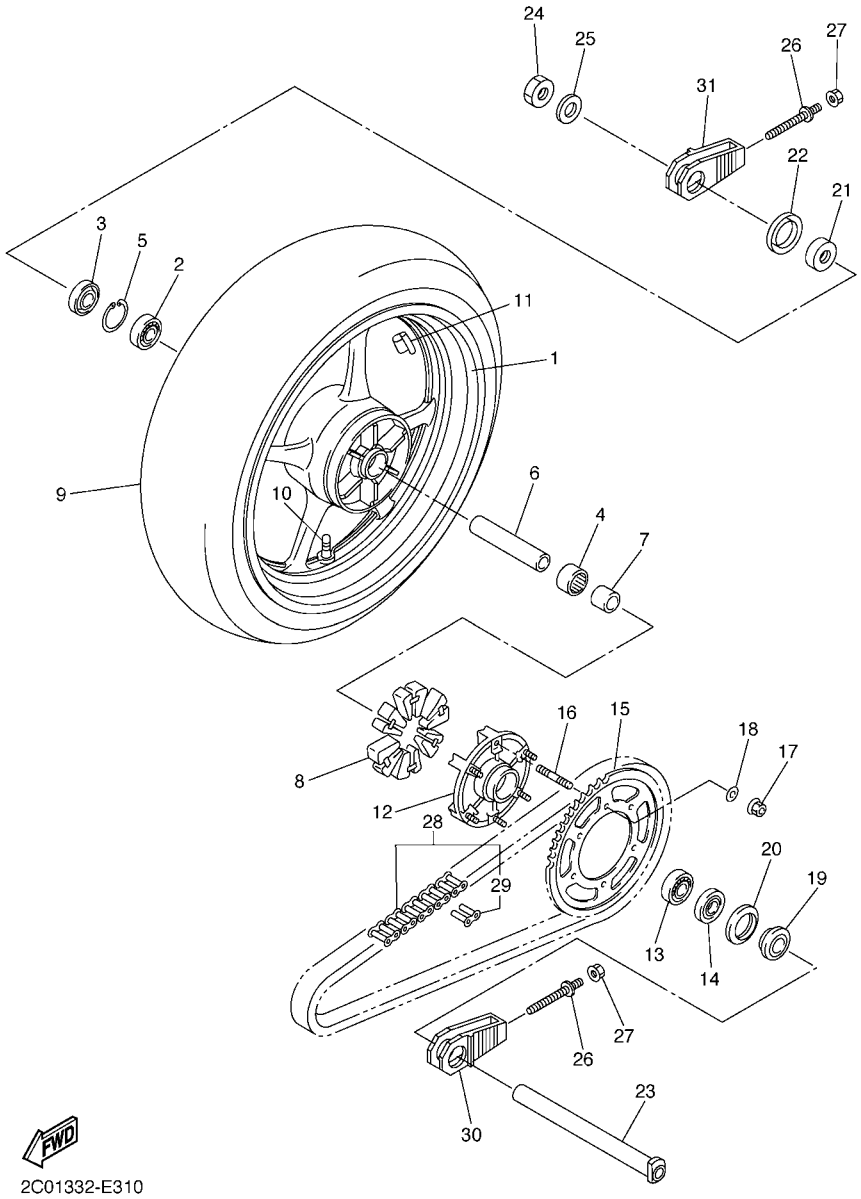

FIG. 31 RUEDA TRASERA

REF. Nº	CODIGO Nº	DESCRIPCION	13S1					OBSERVACIONES
25	90201–25020	ARANDELA PLANA	1					
26	2C0–25379–00	PERNO DE TIRADOR DE CADENA	2					
27	95604–08200	TUERCA DE AUTO-CIERRE	2					
28	94582–21114	CADENA (DID525V8-114)	1					
29	94682–21031	.CONECTOR DE CADENA	1					
30	2C0–25388–00	TIRADOR DE CADENA 1	1					
31	2C0–25389–00	TIRADOR DE CADENA 2	1					

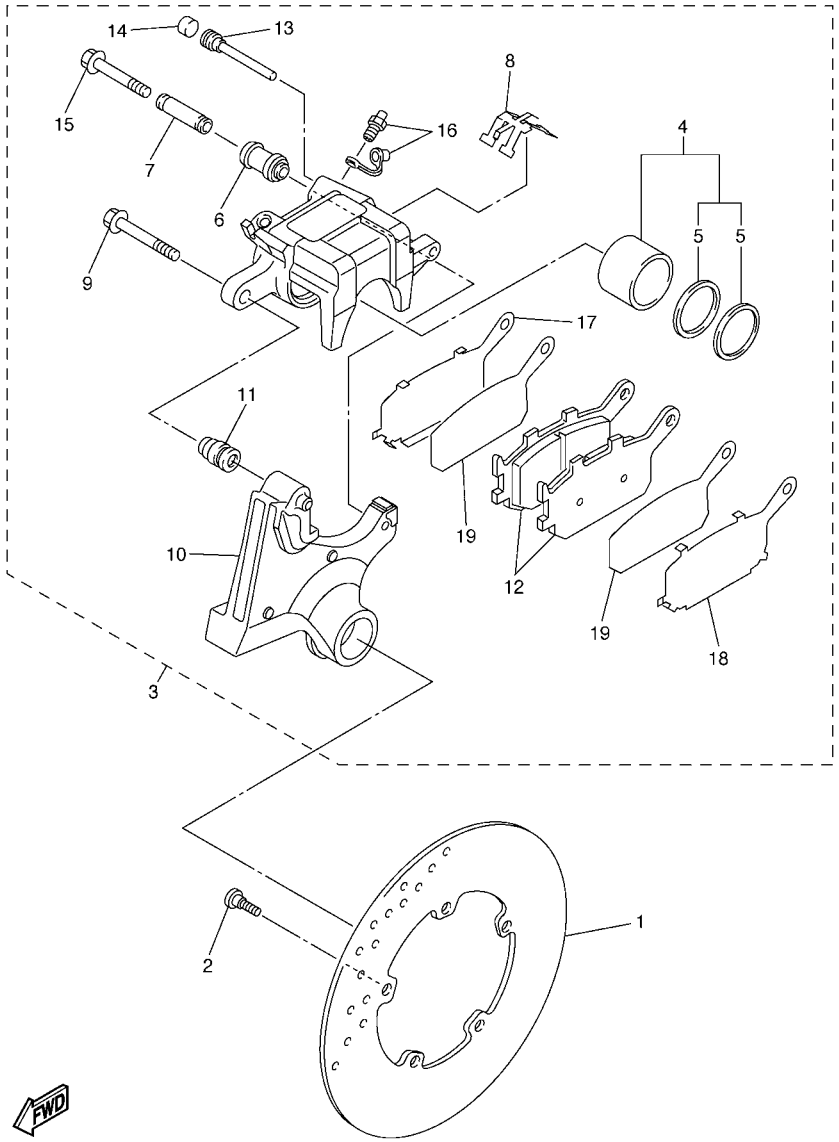

2C01300-E320

FIG. 32 CALIBRE FRENO TRASERA

REF. Nº	CODIGO Nº	DESCRIPCION	13S1					OBSERVACIONES
1	5SL–2582W–00	DISCO DE FRENO TRASEROS 2	1					
2	90149–08009	TORNILLO DE REGLAJE	5					
3	2C0–2580W–00	CALIBRE COMPLETO TRASEROS 2	1					
4	5VY–W0057–00	.PISTON COMPLETO PINZA	1					
5	5SL–W0047–00	..JUEGO DE RETENES DE PINZA	1					
6	5SL–25917–00	.FUNDA DE CALIBRE	1					
7	5SL–25838–00	.CASQUILLO DE CALIBRE	1					
8	5SL–25919–00	.SOPORTE DE PASTILLAS	1					
9	5SL–25914–00	.PASADOR	1					
10	2C0–25921–00	.MENSULA DE SOPORTE	1					
11	3JD–25917–00	.FUNDA DE CALIBRE	1					
12	5VX–W0046–00	.JUEGO DE PASTILLAS DE FRENO 2	1					
13	8CR–25924–00	.PASADOR	1					
14	5DH–25916–00	.TAPON	1					
15	5SL–25926–00	.PERNO	1					
16	1UY–W0048–00	.CJTO TORNILLO DE PURGA	1					
17	5SL–25827–00	.CUNA DE CALIBRE	1					
18	5SL–25827–10	.CUNA DE CALIBRE	1					
19	5SL–25828–00	.CUNA DE CALIBRE	2					

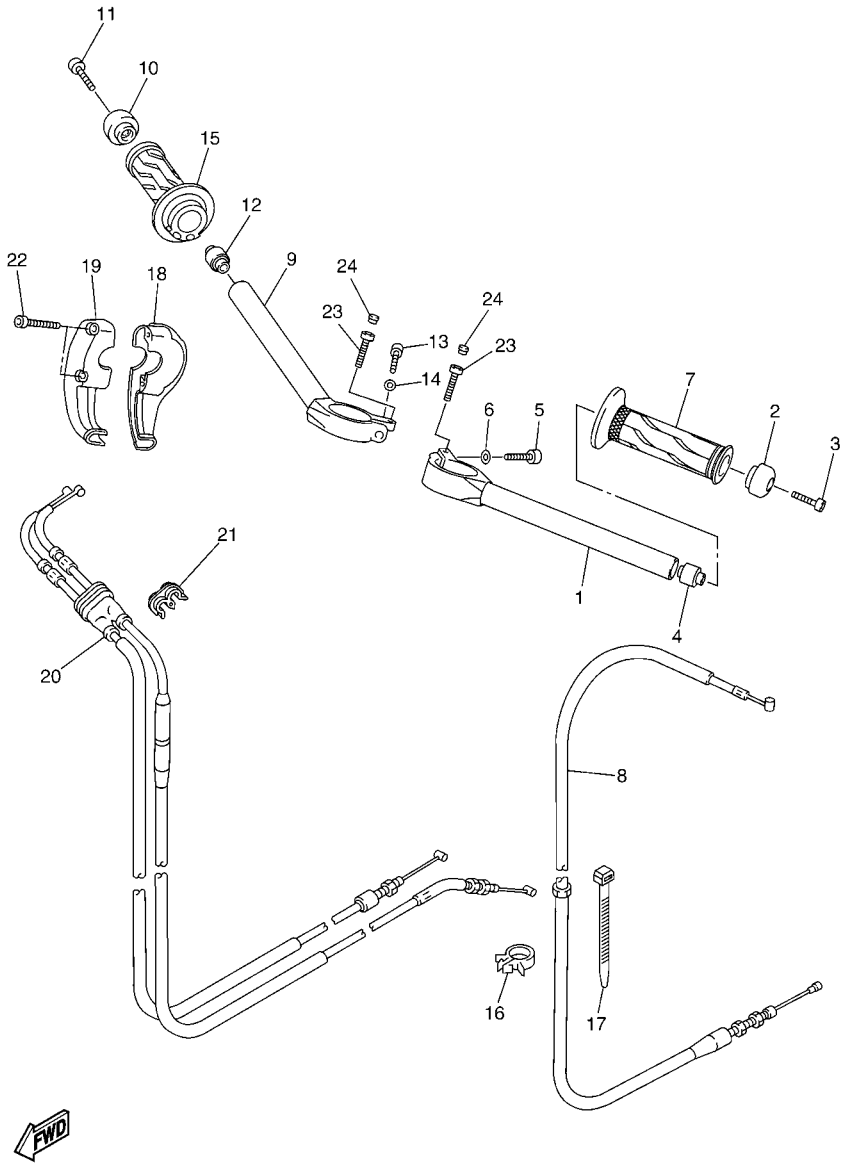

13S1300-G330

FIG. 33 MANILLAR & CABLE

REF. Nº	CODIGO Nº	DESCRIPCION	13S1					OBSERVACIONES
1	13S–26121–00	MANUBRIO (MI)	1					
2	4XV–26246–00	EXTREMO DE EMPUNADURA	1					
3	91312–06025	TORNILLO	1					
4	4JH–23434–00	SOPORTE DE AMORTIGUADOR	1					
5	91314–08030	PERNO	1					
6	90201–08452	ARANDELA PLANA	1					
7	2C0–26241–00	EMPUNADURA	1					
8	2C0–26335–00	CABLE DE EMBRAGUE	1					
9	13S–26122–00	MANUBRIO (MD)	1					
10	4XV–26246–00	EXTREMO DE EMPUNADURA	1					
11	91312–06025	TORNILLO	1					
12	4JH–23434–00	SOPORTE DE AMORTIGUADOR	1					
13	91314–08030	PERNO	1					
14	90201–08452	ARANDELA PLANA	1					
15	2C0–26240–00	EMPUNADURA COMPLETA	1					
16	90464–15157	BRIDA	1					
17	90464–15195	BRIDA	1					
18	5VY–26281–00	TAPA DE EMPUNADURA SUPERIOR	1					
19	2C0–26282–00	TAPA DE EMPUNADURA INFERIOR	1					
20	13S–26302–00	CABLE DE ACELERADOR COMPLETO	1					
21	90464–04001	BRIDA	1					
22	90110–05018	TORNILLO ALLEN	2					
23	91312–06030	TORNILLO	2					
24	2H9–23469–00	TAPA DE PERNO	2					

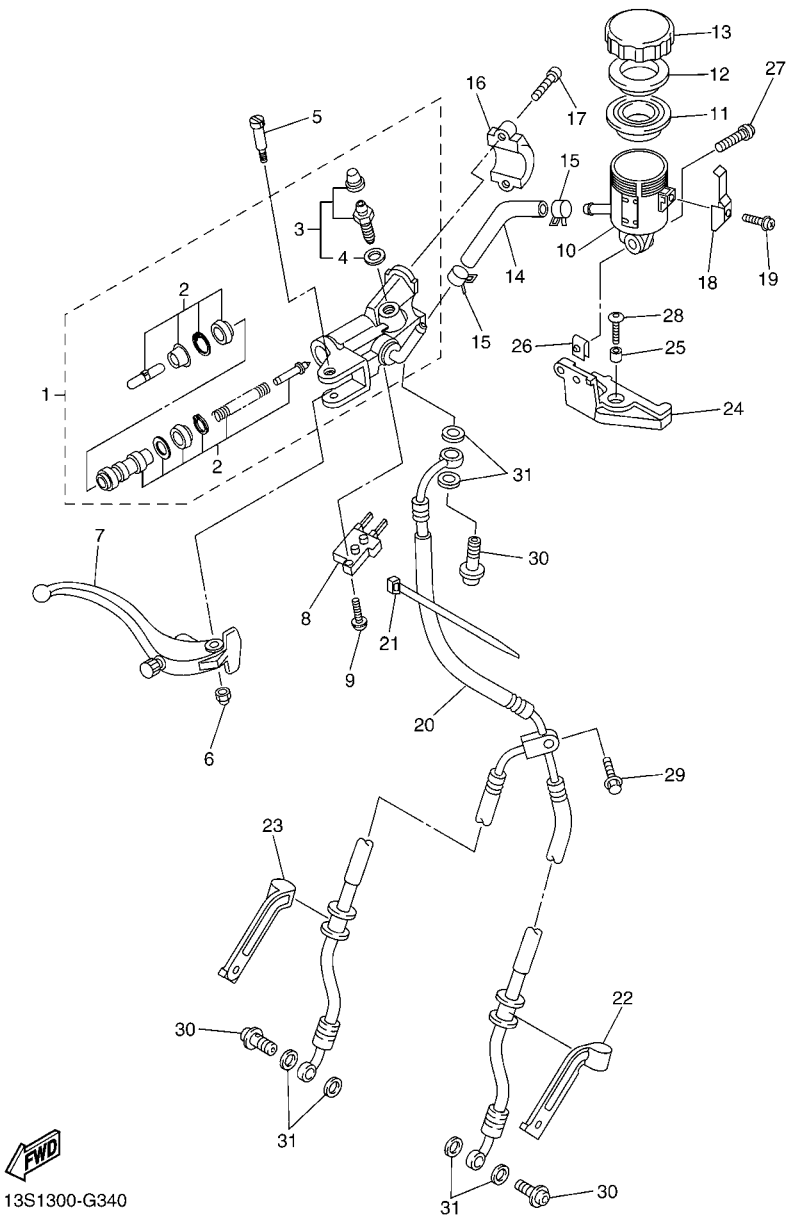

FIG. 34 CILINDRO MAESTRO DELANTERO

REF. Nº	CODIGO Nº	DESCRIPCION	13S1					OBSERVACIONES
1	5SL–W2587–00	CILINDRO MAESTRO SUB COMPLET	1					
2	5VY–W0041–00	.JUEGO DE CILINDRO MAESTRO	1					
3	5VY–W0048–00	.CJTO TORNILLO DE PURGA	1					
4	5VY–25975–00	..SELLO 1	1					
5	5VY–2589F–01	PERNO DE PALANCA	1					
6	5VS–2586F–00	TUERCA DE CUBIERTA	1					
7	5SL–83922–10	PALANCA 2	1					
8	4HM–83980–00	INTERRUP. DE PARADA DELANTERO	1					
9	5VS–2585H–00	TORNILLO	1					
10	5SL–25894–20	TANQUE DE RESERVA	1					
11	5VY–25854–00	DIAFRAGMA TANQUE RESERVA	1					
12	5VY–25855–00	BUJE DE DIAFRAGMA	1					
13	5VY–25852–00	TAPA DE TANQUE DE RESERVA	1					
14	13S–2589E–00	TUBO	1					
15	90467–120A3	PRESILLA	2					
16	5VS–25867–00	SOPORTE DE CILINDRO MAESTRO	1					
17	5VS–26332–00	PERNO	2					
18	5VY–2589G–00	SOPORTE	1					
19	5VY–2589H–00	TORNILLO	1					
20	13S–25872–00	MANGUERA DE FRENO 1	1					
21	3MA–82591–00	BANDA	1					
22	2C0–25886–00	SOPORTE DE MANGUERA FRENO	1					
23	13S–25887–00	SOPORTE DE MANGUERA FRENO	1					
24	13S–26292–00	SOPORTE	1					
25	90387–06057	ESPACIADOR	1					
26	90183–050A0	TUERCA DE RESORTE	1					
27	90111–05025	TORNILLO	1					

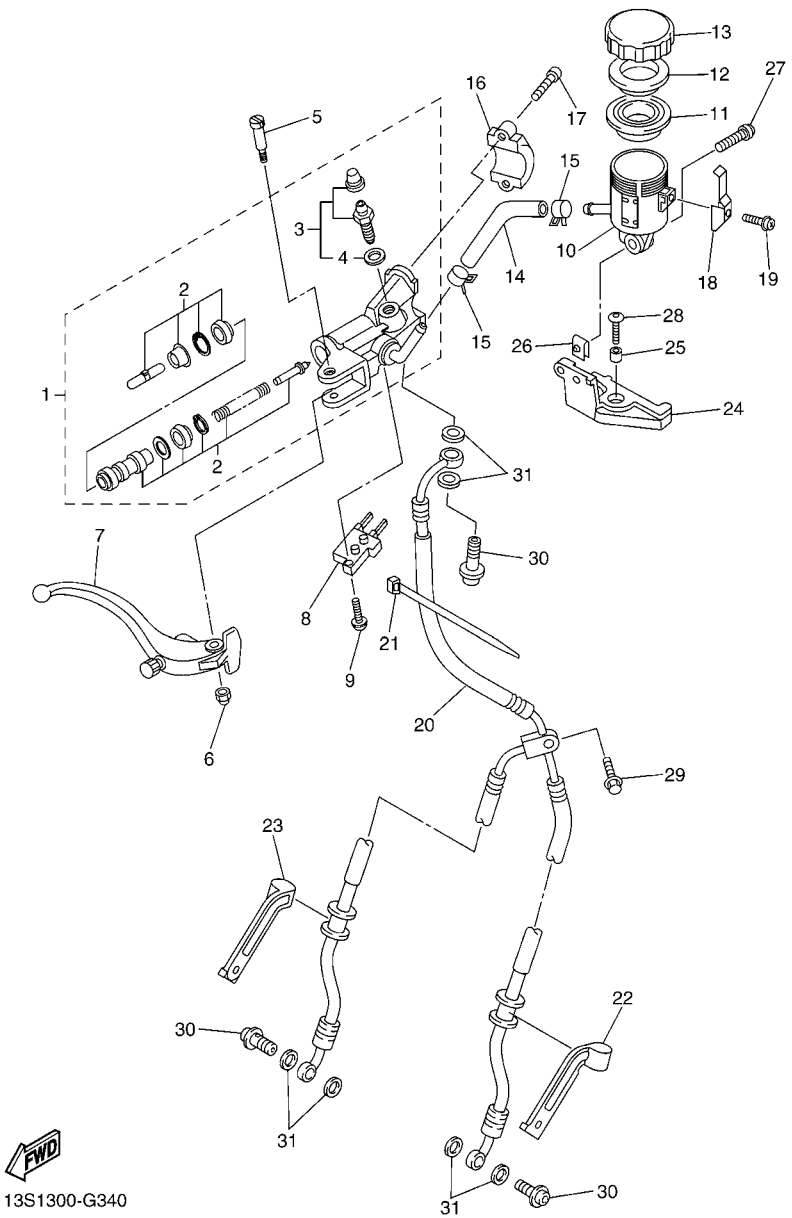

FIG. 34 CILINDRO MAESTRO DELANTERO

REF. Nº	CODIGO Nº	DESCRIPCION	13S1					OBSERVACIONES
28	90111–06041	TORNILLO	1					
29	90105–06041	TORNILLO	1					
30	90401–10172	PERNO DE UNION	3					
31	90430–10005	JUNTA	6					

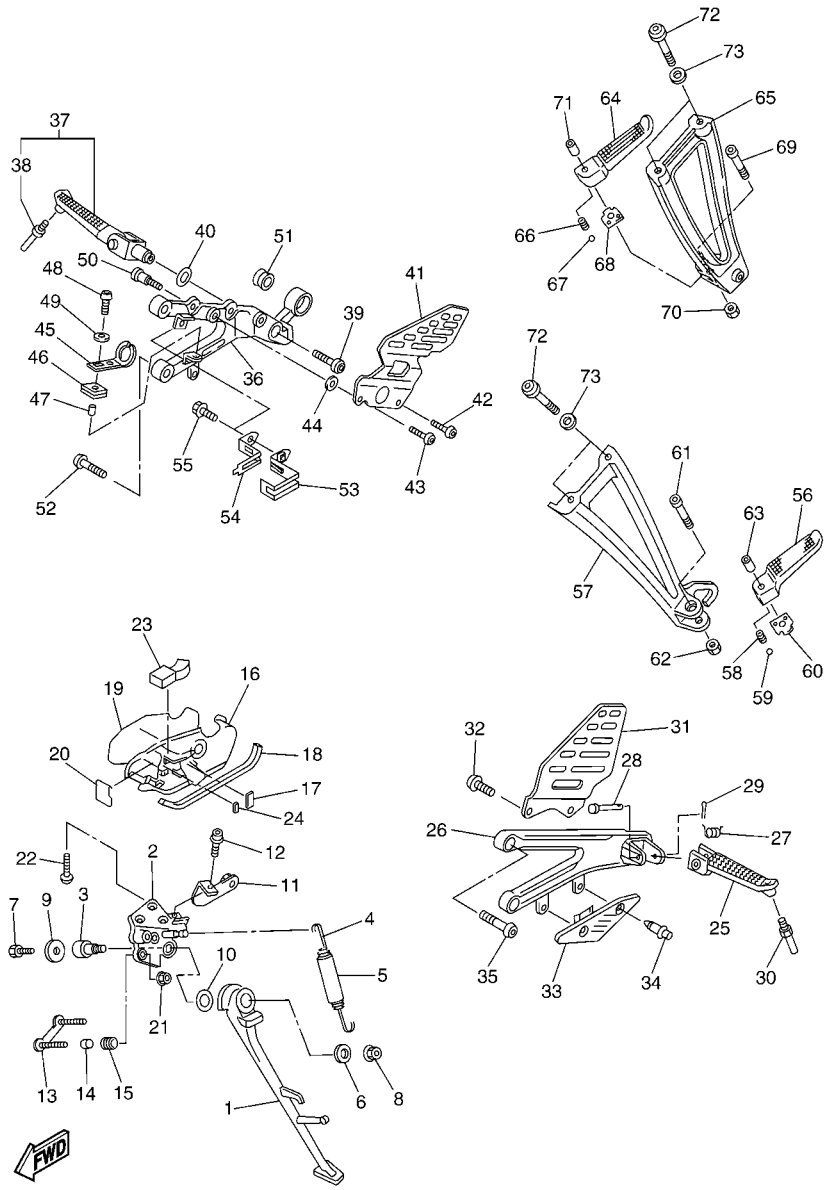

FIG. 35 SOPORTE & APOYAPIE

REF. Nº	CODIGO Nº	DESCRIPCION	13S1					OBSERVACIONES
1	2C0–27311–00	PUNTAL LATERAL	1					
2	2C0–27321–00	SOPORTE DE PUNTAL LATERAL	1					
3	2C0–27351–00	GUIA DE PUNTAL LATERAL	1					
4	90506–18008	RESORTE DE TENSION	1					
5	90445–19002	TUBO (L60)	1					
6	90201–10035	ARANDELA PLANA	1					
7	90101–08662	TORNILLO	1					
8	95602–10200	TUERCA DE AUTO-CIERRE	1					
9	90201–08050	ARANDELA PLANA	1					
10	90201–146F9	ARANDELA PLANA	1					
11	13S–2836F–00	MENSULA 3	1					
12	90105–06020	TORNILLO	1					
13	2C0–27263–00	SOPORTE 1	1					
14	90387–05025	ESPACIADOR	2					
15	90480–11006	TAPON	2					
16	2C0–27453–00	CUBIERTA APOYAPIE 1	1					
17	2C0–27414–00	AMORTIGUADOR DE APOYAPIE	1					
18	2C0–27415–00	PLACA DE APOYAPIE	1					
19	2C0–28428–00	SELLO 1	1					
20	2C0–28429–00	SELLO 2	1					
21	90185–05009	TUERCA AUTOBLOCANTE	2					
22	90111–08065	TORNILLO	3					
23	2C0–28425–00	AMORTIGUADOR 3	1					
24	2C0–21485–00	AMORTIGUADOR DE GOMA 1	1					
25	2C0–27451–00	APOYAPIE	1					
26	2C0–27442–00	SOPORTE 2	1					
27	90508–18134	RESORTE DE TORSION	1					

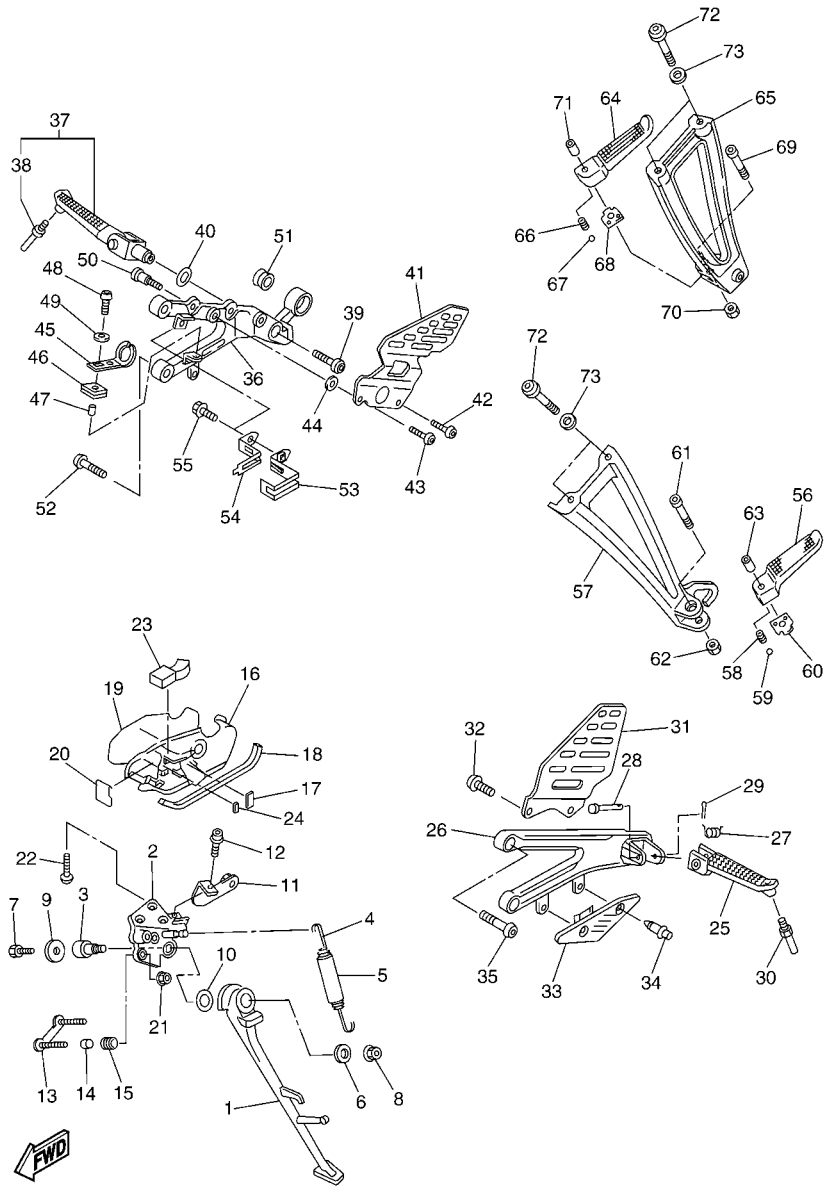

FIG. 35 SOPORTE & APOYAPIE

REF. Nº	CODIGO Nº	DESCRIPCION	13S1					OBSERVACIONES
28	90240–08084	PASADOR CON HOYO	1					
29	91402–25015	CHAVETA	1					
30	2C0–27435–00	PERNO	1					
31	2C0–27445–00	PLACE 1	1					
32	90149–06233	TORNILLO DE REGLAJE	2					
33	2C0–27491–00	PROTECTOR	1					
34	90269–06008	REMACHE	2					
35	90109–085G6	PERNO	2					
36	2C0–27443–00	SOPORTE 3	1					
37	2C0–27420–00	APOYAPIE DELANTERO (MD)	1					
38	2C0–27435–00	.PERNO	1					
39	90109–103A9	PERNO	1					
40	90214–13002	ARANDELA DE POSICION	1					
41	13S–27446–00	PLACE 2	1					
42	90149–06233	TORNILLO DE REGLAJE	1					
43	90111–06067	TORNILLO	1					
44	90387–06215	ESPACIADOR	1					
45	13S–2144G–00	SOPORTE DE INTERRUPTOR	1					
46	90480–12607	TAPON	1					
47	90387–06023	ESPACIADOR	1					
48	92017–06016	PERNO	1					
49	90201–06380	ARANDELA PLANA	1					
50	90109–066F0	PERNO	2					
51	5VY–14747–00	AMORTIGUADOR DE SILENCIADOR	1					
52	90109–085G6	PERNO	2					
53	2C0–2116K–00	SOPORTE 8	1					
54	2C0–2116L–00	SOPORTE 9	1					

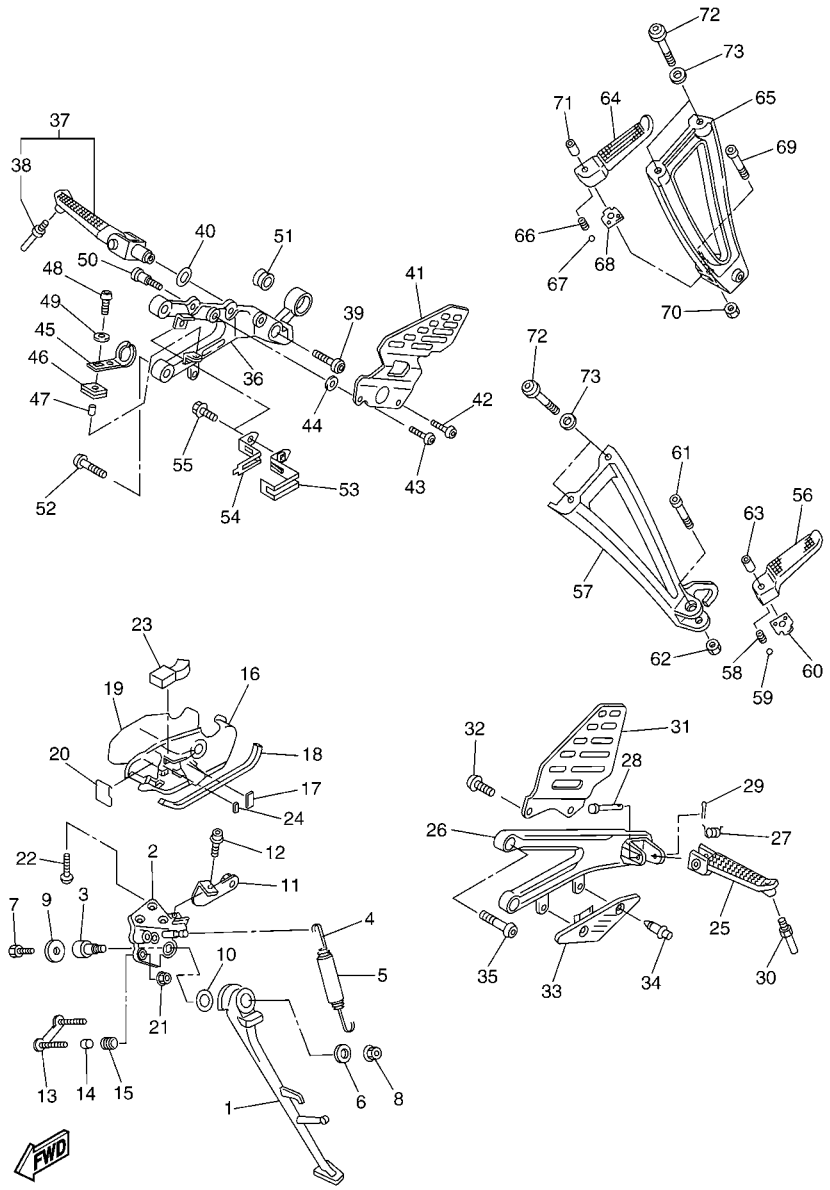

FIG. 35 SOPORTE & APOYAPIE

REF. Nº	CODIGO Nº	DESCRIPCION	13S1					OBSERVACIONES
55	95024–06012	PERNO, DE BRIDA	1					
56	5JJ–27431–00	APOYAPIE POSTERIOR 1	1					
57	2C0–2741L–00	MENSULA 4	1					
58	90501–12743	RESORTE DE COMPRESION	1					
59	93501–04011	BOLA	1					
60	5JJ–27437–01	ARANDELA ESPECIAL	1					
61	91314–06035	PERNO	1					
62	95604–06200	TUERCA DE AUTO-CIERRE	1					
63	90387–06697	ESPACIADOR	1					
64	5JJ–27441–00	APOYAPIE POSTERIOR 2	1					
65	2C0–2742L–00	MENSULA 5	1					
66	90501–12743	RESORTE DE COMPRESION	1					
67	93501–04011	BOLA	1					
68	5JJ–27437–01	ARANDELA ESPECIAL	1					
69	91314–06035	PERNO	1					
70	95604–06200	TUERCA DE AUTO-CIERRE	1					
71	90387–06697	ESPACIADOR	1					
72	90111–08066	TORNILLO	4					
73	13S–27417–00	ARANDELA DE APOYAPIE	4					

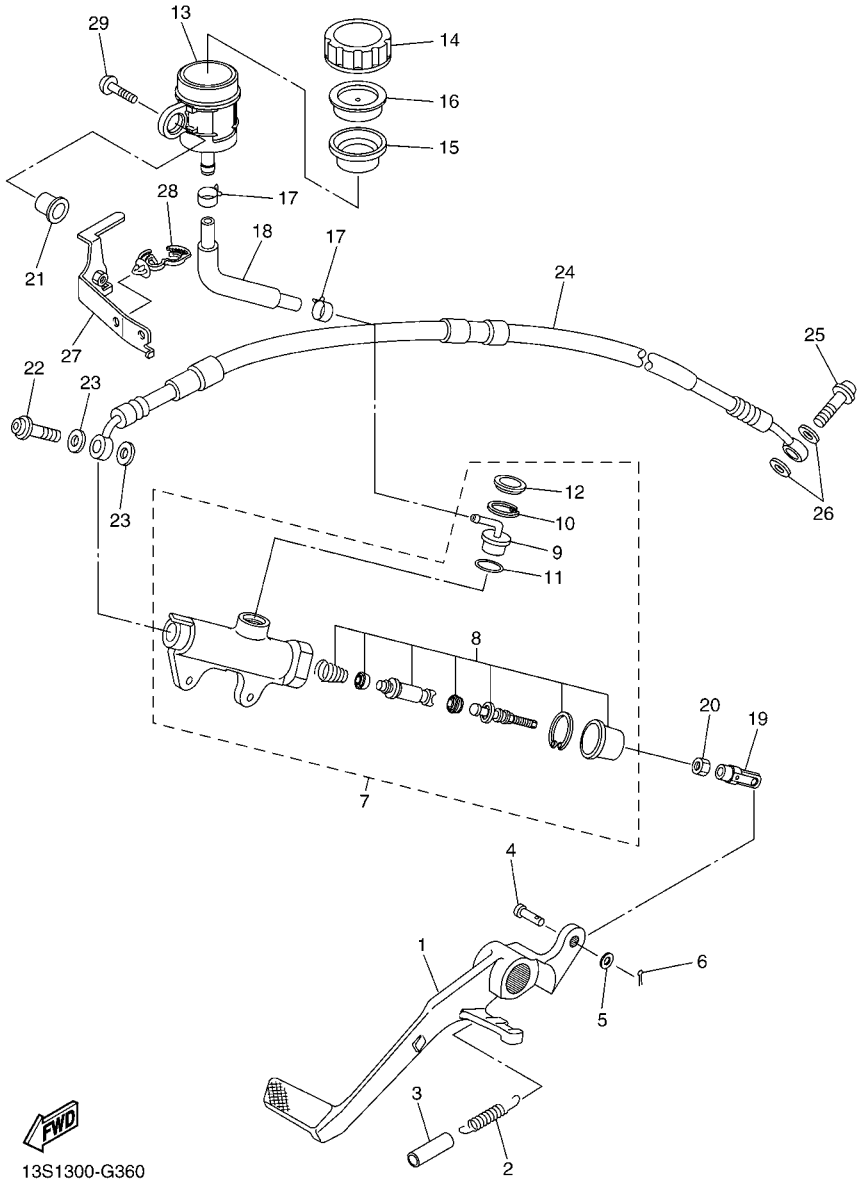

FIG. 36 CILINDRO MAESTRO TRASERO

REF. Nº	CODIGO Nº	DESCRIPCION	13S1					OBSERVACIONES
1	2C0–27211–00	PEDAL DE FRENO	1					
2	90506–20193	RESORTE DE TENSION	1					
3	90446–15386	TUBO RESEIRADERO	1					
4	91702–06018	PASADOR DE ADRAZADERA	1					
5	92907–06200	ARANDELA	1					
6	91402–16012	CHAVETA	1					
7	2C0–2583V–01	CILINDRO, MAESTRO TRASERO	1					
8	5XT–W0042–60	.JUEGO DE CILINDRO MAESTRO	1					
9	4ML–2582A–50	.CONECTOR	1					
10	2VN–25866–00	.PRESILLA REDONDA	1					
11	93210–15620	.ANILLO O	1					
12	3FV–2589A–00	.CUBIERTA PARA POLVO	1					
13	2C0–25894–00	TANQUE DE RESERVA	1					
14	4PX–25852–00	TAPA DE TANQUE DE RESERVA	1					
15	2VN–25854–00	DIAFRAGMA TANQUE RESERVA	1					
16	2VN–25855–00	BUJE DE DIAFRAGMA	1					
17	90467–12085	PRESILLA	2					
18	2C0–25895–00	MANGUERA DE TANQUE DE RESERVA	1					
19	4XV–27222–01	UNION	1					
20	95307–08700	TUERCA	1					
21	90387–05028	ESPACIADOR	1					
22	90401–10172	PERNO DE UNION	1					
23	90430–10005	JUNTA	2					
24	2C0–25874–00	MANGUERA DE FRENO	1					
25	90401–10172	PERNO DE UNION	1					
26	90430–10005	JUNTA	2					
27	13S–21228–00	SOPORTE, TANQUE DE RESERVA	1					

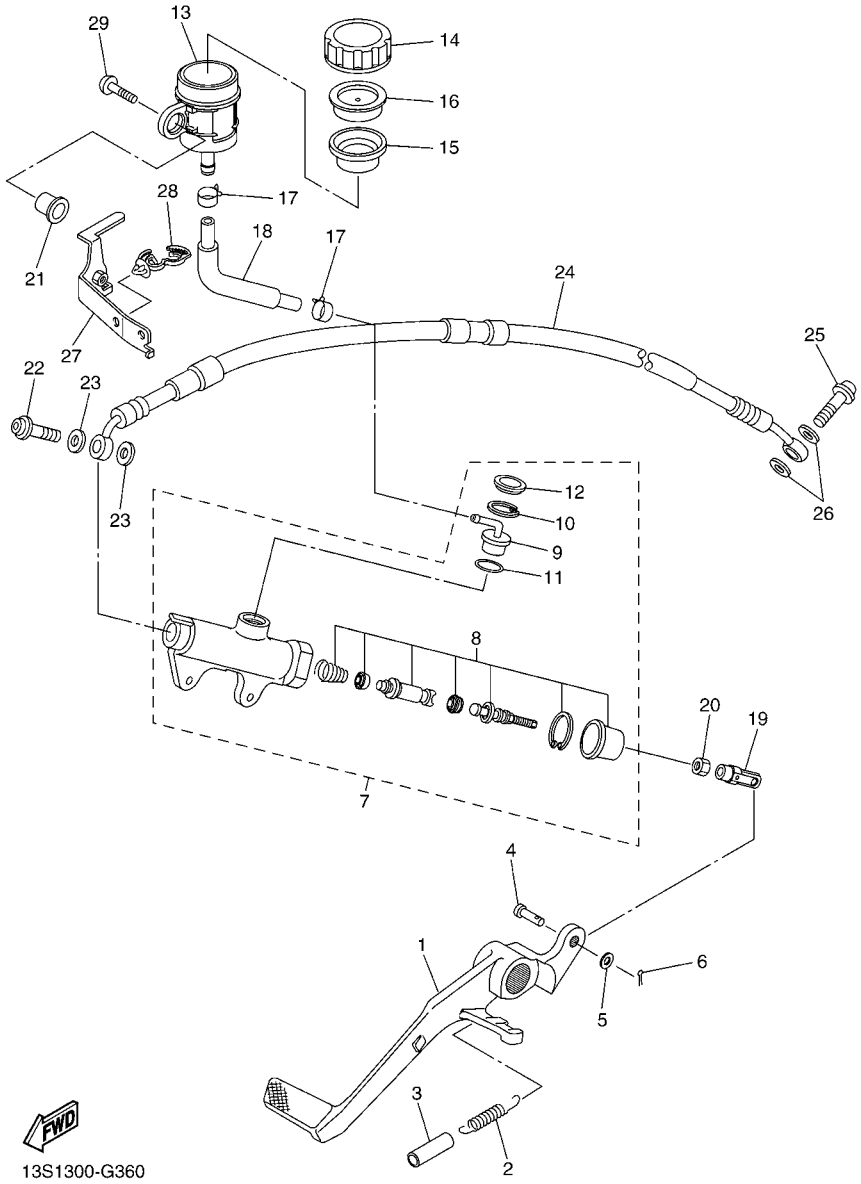

FIG. 36 CILINDRO MAESTRO TRASERO

REF. Nº	CODIGO Nº	DESCRIPCION	13S1					OBSERVACIONES
28	90464–13249	BRIDA	1					
29	90111–05026	TORNILLO	1					

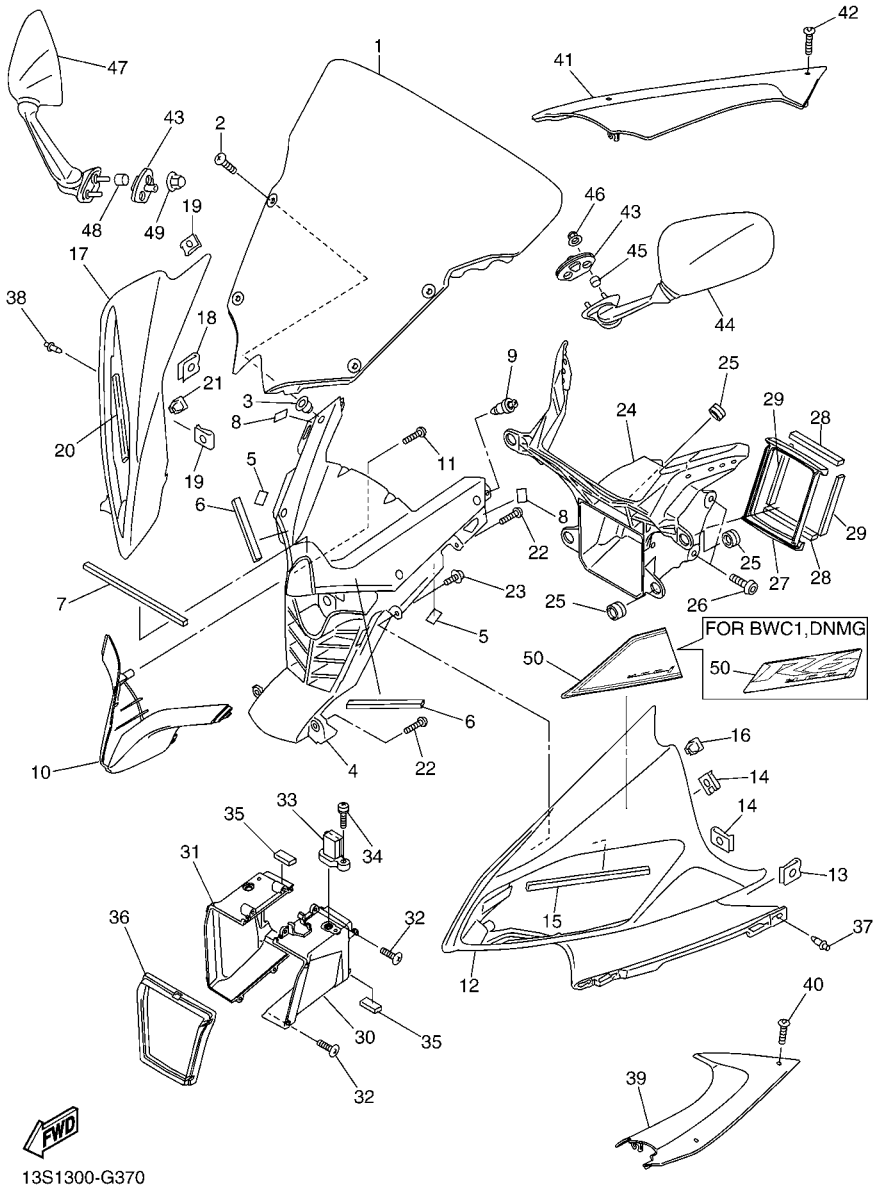

FIG. 37 BOVEDA 1

REF. Nº	CODIGO Nº	DESCRIPCION	13S1					OBSERVACIONES
1	13S–28381–00	PARABRISA	1					
2	90150–05023	TORNILLO CABEZA REDONDA	4					
3	90179–05523	TUERCA	4					
4	13S–2836K–00	PANEL 1	1					
5	3P6–28217–00	AMORTIGUADOR 1	2					
6	13S–28227–00	AMORTIGUADRO 2	2					
7	13S–28237–00	AMORTIGUADOR 3	1					
8	13S–28371–00	AMORTIGUADOR	2					
9	90269–06046	REMACHE	2					
10	13S–28365–00–P0	CUBIERTA	1					MBL2
11	97702–40016	TORNILLO ROSCA HEMBRA	2					
12	13S–2835G–00–P0	CARROCERIA, DELANT. SUP. 1	1					UR PARA DPBMC
	13S–2835G–00–P1	CARROCERIA, DELANT. SUP. 1	1					UR PARA BWC1
	13S–2835G–00–P2	CARROCERIA, DELANT. SUP. 1	1					UR MBL2 PARA DNMG
13	90183–05076	TUERCA DE RESORTE	1					
14	90183–05042	TUERCA DE RESORTE	2					
15	2C0–28455–00	AMORTIGUADOR 4	1					
16	90480–01605	TAPON	1					
17	13S–2835H–00–P0	CARROCERIA, DELANT. SUP. 2	1					UR PARA DPBMC
	13S–2835H–00–P1	CARROCERIA, DELANT. SUP. 2	1					UR PARA BWC1
	13S–2835H–00–P2	CARROCERIA, DELANT. SUP. 2	1					UR MBL2 PARA DNMG
18	90183–05076	TUERCA DE RESORTE	1					
19	90183–05042	TUERCA DE RESORTE	2					
20	2C0–28455–00	AMORTIGUADOR 4	1					
21	90480–01605	TAPON	1					
22	97707–50016	TORNILLO	4					
23	97707–40012	TORNILLO ROSCA HEMBRA	2					

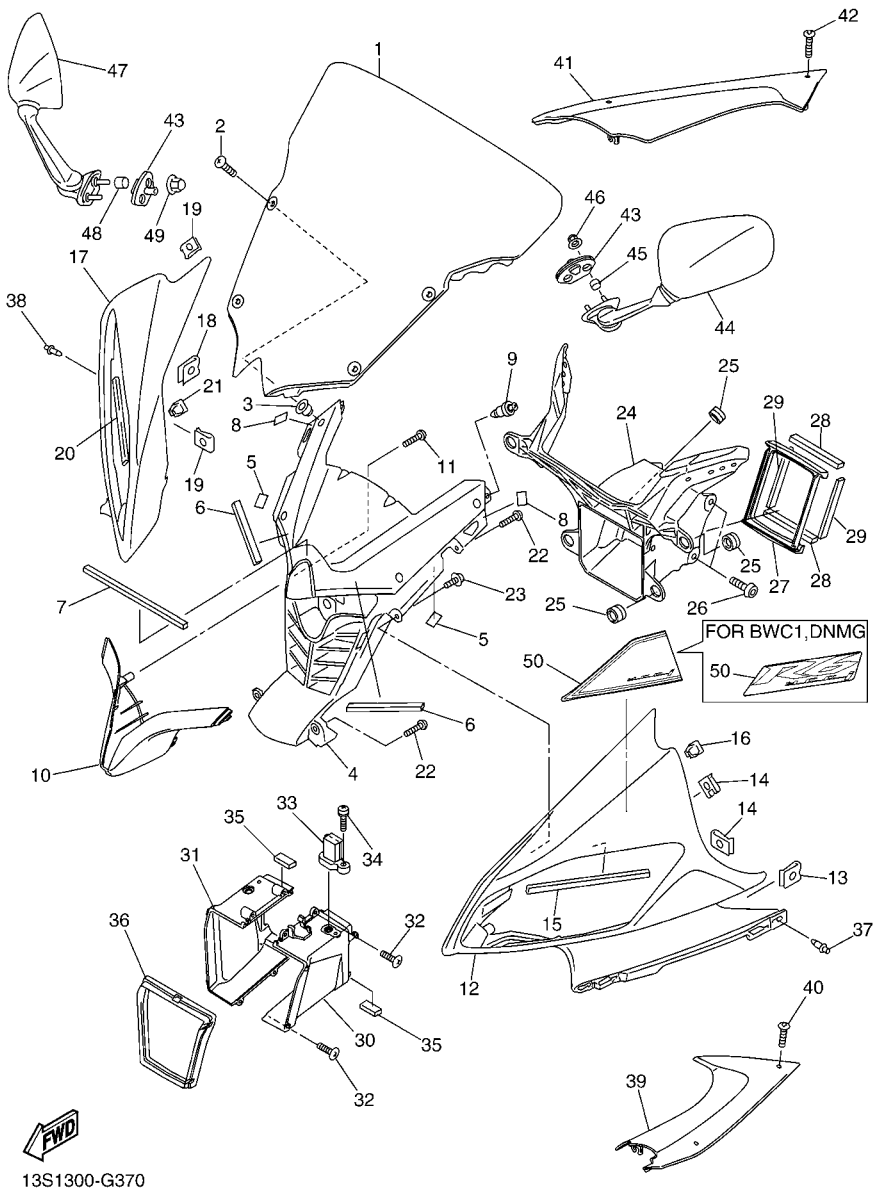

FIG. 37 BOVEDA 1

REF. Nº	CODIGO Nº	DESCRIPCION	13S1					OBSERVACIONES
24	13S–28356–00	SOPORTE 1	1					
25	4XV–83513–00	AMORTIGUADOR	7					
26	90111–06038	TORNILLO	4					
27	2C0–28342–01	UNION	1					
28	2C0–28217–00	AMORTIGUADOR 1	2					
29	2C0–28227–00	AMORTIGUADRO 2	2					
30	13S–2838R–00	CONDUCTO 2	1					
31	13S–2838T–00	CONDUCTO 3	1					
32	97702–40016	TORNILLO ROSCA HEMBRA	4					
33	8FP–85886–00	SENSOR	1					
34	97702–50116	TORNILLO ROSCA HEMBRA	1					
35	51Y–21639–00	AMORTIGUADOR 2	4					
36	2C0–28371–00	AMORTIGUADOR	1					
37	90269–06008	REMACHE	1					
38	90269–06008	REMACHE	1					
39	13S–2837L–00	PANEL DE CONSOLA	1					
40	90111–05021	TORNILLO	2					
41	13S–2837M–00	PANEL, DE CONSOLA 2	1					
42	90111–05021	TORNILLO	2					
43	13S–26298–00	PLACA DE ESPEJO 1	2					
44	13S–26280–00	ESPEJO COMPLETO (IZQUIERDO)	1					
45	90387–064T3	ESPACIADOR	2					
46	90176–06008	TUERCA CORONA	2					
47	13S–26290–00	ESPEJO COMPLETO (DERECHO)	1					
48	90387–064T3	ESPACIADOR	2					
49	90176–06008	TUERCA CORONA	2					
50	13S–2832L–00	GRAFICO 13	1					UR PARA DPBMC

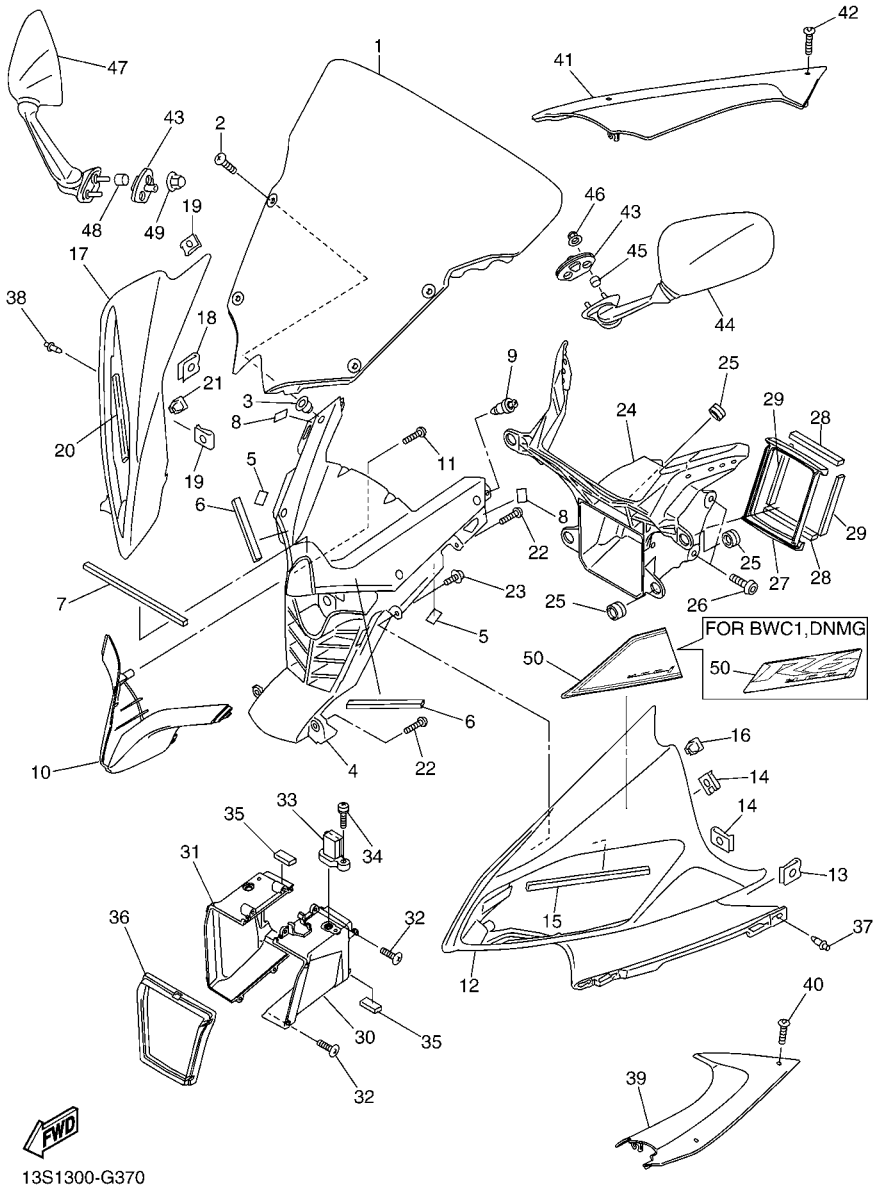

FIG. 37 BOVEDA 1

REF. Nº	CODIGO Nº	DESCRIPCION	13S1					OBSERVACIONES
50	13S–28328–00	EMBLEMA	1					UR PARA BWC1
	13S–28328–10	EMBLEMA	1					UR PARA DNMG

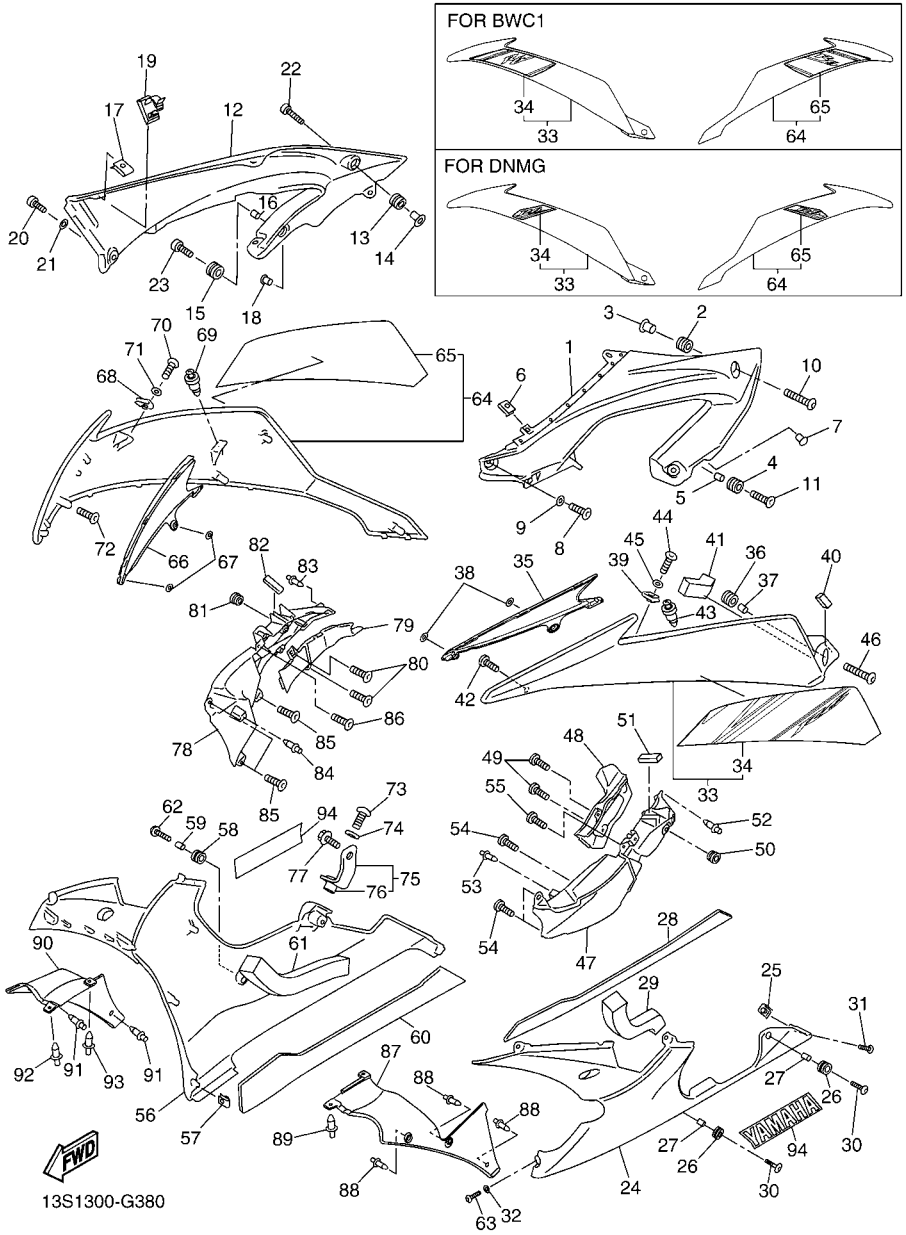

FIG. 38 BOVEDA 2

REF. Nº	CODIGO Nº	DESCRIPCION	13S1					OBSERVACIONES
1	13S–2117V–00–P0	CUBIERTA 7	1					UR PARA DPBMC
	13S–2117V–00–P1	CUBIERTA 7	1					UR PARA BWC1
	13S–2117V–00–P2	CUBIERTA 7	1					UR PARA DNMG
2	90480–12613	TAPON	1					
3	90387–067K8	ESPACIADOR	1					
4	90480–14003	TAPON	1					
5	90387–06057	ESPACIADOR	1					
6	90183–05076	TUERCA DE RESORTE	1					
7	90338–06134	TAPON	1					
8	90111–05003	TORNILLO	1					
9	90202–05180	ARANDELA DE PLANA	1					
10	90111–06063	TORNILLO	1					
11	90111–06040	TORNILLO	1					
12	13S–2117W–00–P0	CUBIERTA 8	1					UR PARA DPBMC
	13S–2117W–00–P1	CUBIERTA 8	1					UR PARA BWC1
	13S–2117W–00–P2	CUBIERTA 8	1					UR PARA DNMG
13	90480–12613	TAPON	1					
14	90387–067K8	ESPACIADOR	1					
15	90480–14003	TAPON	1					
16	90387–06057	ESPACIADOR	1					
17	90183–05076	TUERCA DE RESORTE	1					
18	90338–06134	TAPON	1					
19	90464–20014	BRIDA	1					
20	90111–05003	TORNILLO	1					
21	90202–05180	ARANDELA DE PLANA	1					
22	90111–06063	TORNILLO	1					
23	90111–06040	TORNILLO	1					

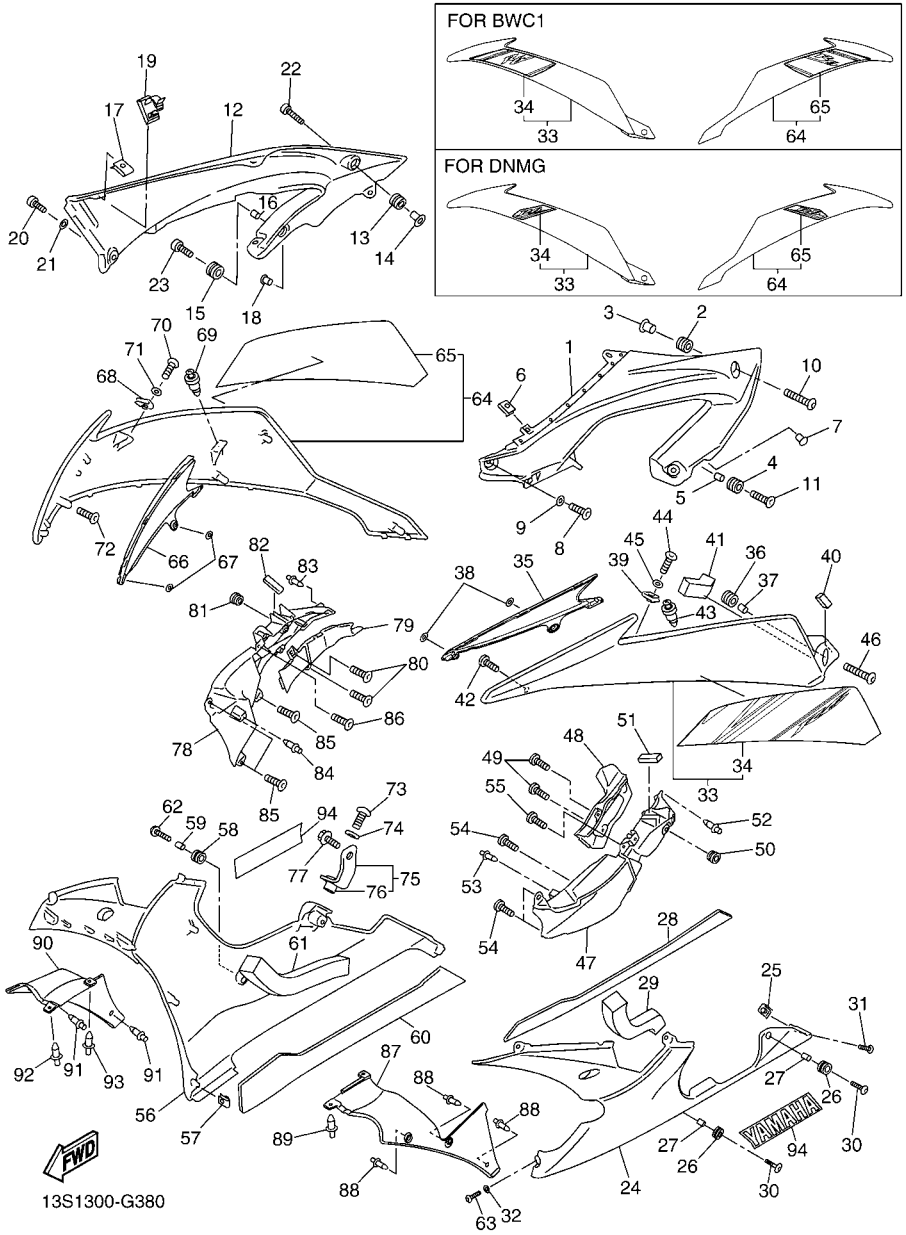

FIG. 38 BOVEDA 2

REF. Nº	CODIGO Nº	DESCRIPCION	13S1					OBSERVACIONES
24	13S–28385–00–P0	CUBIERTA INFERIOR	1					MBL2
25	90183–05076	TUERCA DE RESORTE	1					
26	90480–14003	TAPON	2					
27	90387–06057	ESPACIADOR	2					
28	13S–2838G–00	ASIENTO	1					
29	13S–2836U–00	AMORTIGUADOR DE UBICACION 2	1					
30	90111–06040	TORNILLO	2					
31	90111–05003	TORNILLO	1					
32	90202–05180	ARANDELA DE PLANA	1					
33	13S–W283U–00–P0	PANEL 1	1					UR PARA DPBMC
	13S–W283U–00–P1	PANEL 1	1					UR PARA BWC1
	13S–W283U–00–P2	PANEL 1	1					UR PARA DNMG
34	13S–28391–00	.CALCOMANIA DE BOVEDA 1	1					UR PARA DPBMC
	13S–28391–10	.CALCOMANIA DE BOVEDA 1	1					UR PARA BWC1
	13S–28391–20	.CALCOMANIA DE BOVEDA 1	1					UR PARA DNMG
35	13S–28219–00	CUBIERTA 1	1					
36	90480–14003	TAPON	1					
37	90387–06057	ESPACIADOR	1					
38	90183–05M02	TUERCA DE RESORTE	2					
39	90183–05076	TUERCA DE RESORTE	1					
40	13S–28415–00	AMORTIGUADOR 1	1					
41	13S–24183–00	AMORTIGUADOR DE MONTAJE 3	1					
42	97707–50016	TORNILLO	1					
43	90269–07007	REMACHE	1					
44	90111–05003	TORNILLO	1					
45	90202–05180	ARANDELA DE PLANA	1					
46	90111–06040	TORNILLO	1					

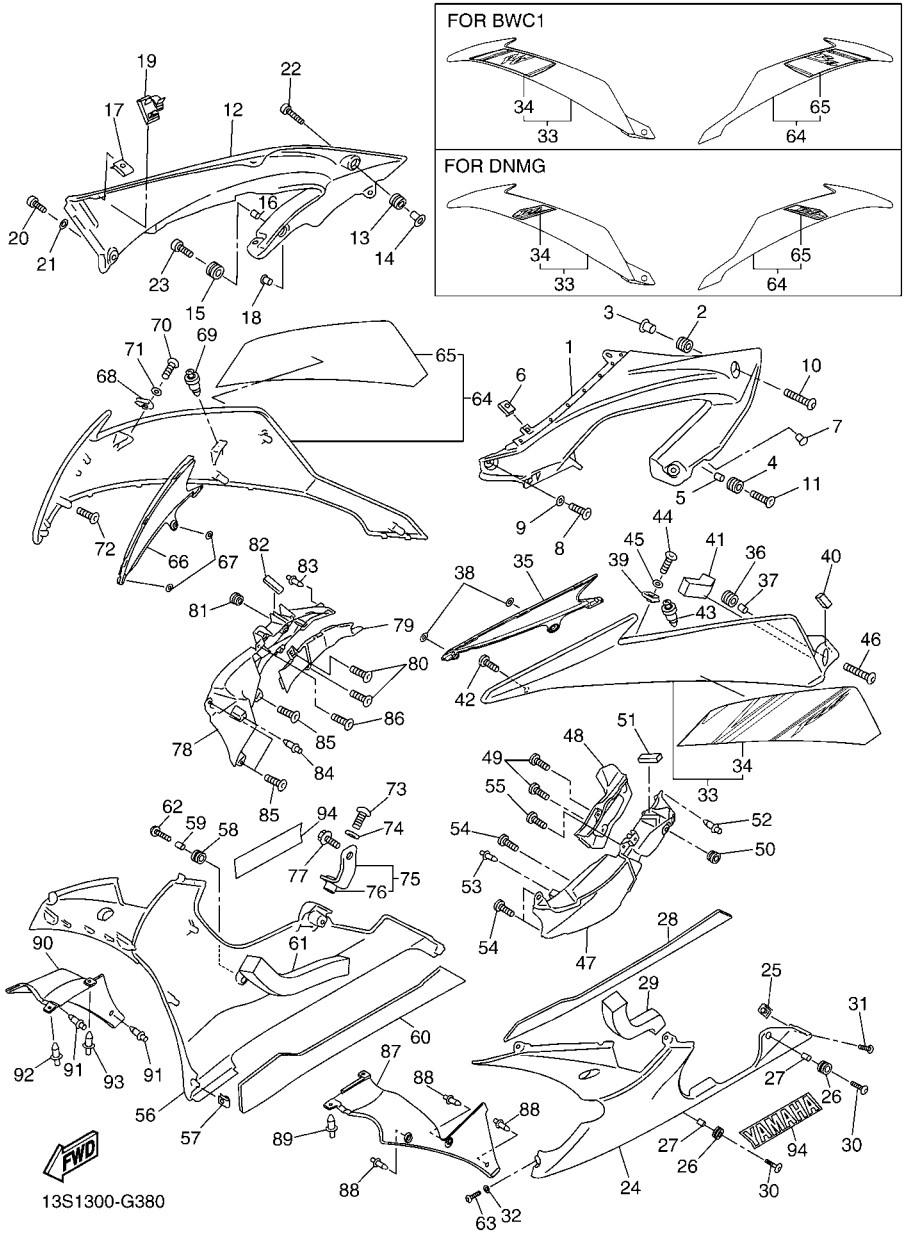

FIG. 38 BOVEDA 2

REF. Nº	CODIGO Nº	DESCRIPCION	13S1					OBSERVACIONES
47	13S–2137U–00	GUIA DE AIRE 1	1					
48	13S–2137K–00	GUIA DE AIRE 3	1					
49	97702–50016	TORNILLO ROSCA HEMBRA	2					
50	90480–01558	TAPON	1					
51	13S–28217–00	AMORTIGUADOR 1	1					
52	90269–06008	REMACHE	1					
53	90269–06081	REMACHE	1					
54	97707–50016	TORNILLO	3					
55	97702–50020	TORNILLO ROSCA HEMBRA	1					
56	13S–28395–00–P0	CUBIERTA INFERIOR	1					MBL2
57	90183–05076	TUERCA DE RESORTE	1					
58	90480–14003	TAPON	1					
59	90387–06057	ESPACIADOR	1					
60	13S–2848K–00	ASIENTO 2	1					
61	13S–2847R–00	AMORTIGUADOR 10	1					
62	90111–06040	TORNILLO	1					
63	90111–05003	TORNILLO	1					
64	13S–W283V–00–P0	PANEL 2	1					UR PARA DPBMC
	13S–W283V–00–P1	PANEL 2	1					UR PARA BWC1
	13S–W283V–00–P2	PANEL 2	1					UR PARA DNMG
65	13S–28392–00	.CALCOMANIA DE BOVEDA 2	1					UR PARA DPBMC
	13S–28392–10	.CALCOMANIA DE BOVEDA 2	1					UR PARA BWC1
	13S–28392–20	.CALCOMANIA DE BOVEDA 2	1					UR PARA DNMG
66	13S–28229–00	CUBIERTA 2	1					
67	90183–05M02	TUERCA DE RESORTE	2					
68	90183–05076	TUERCA DE RESORTE	1					
69	90269–07007	REMACHE	1					

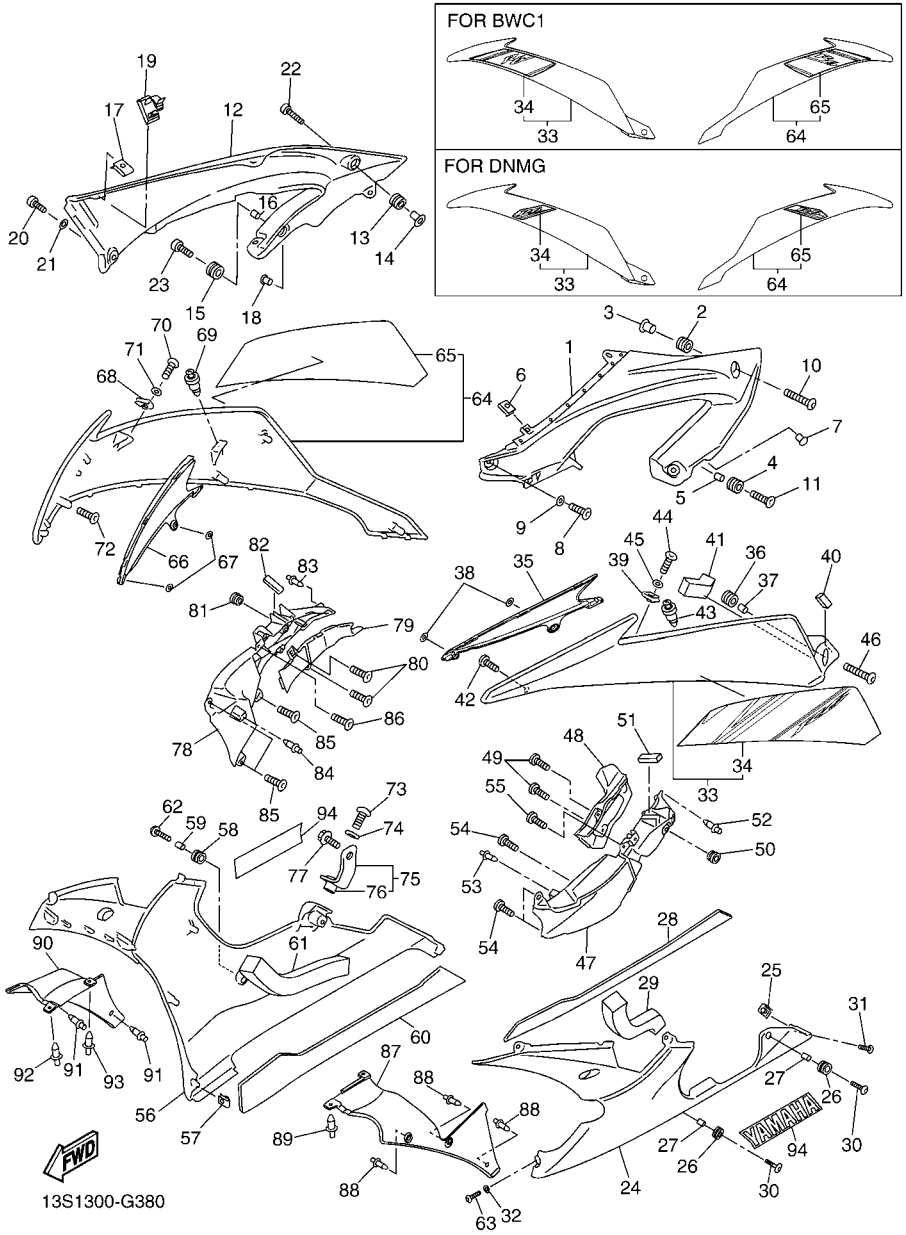

FIG. 38 BOVEDA 2

REF. Nº	CODIGO Nº	DESCRIPCION	13S1					OBSERVACIONES
70	90111–05003	TORNILLO	1					
71	90202–05180	ARANDELA DE PLANA	1					
72	97707–50016	TORNILLO	2					
73	90109–06207	PERNO	1					
74	90202–10024	ARANDELA DE PLANA	1					
75	13S–2836G–00	MENSULA 4	1					
76	90179–06059	.TUERCA	1					
77	90105–06020	TORNILLO	1					
78	13S–2137V–00	GUIA DE AIRE 2	1					
79	13S–2137L–00	GUIA DE AIRE 4	1					
80	97702–50016	TORNILLO ROSCA HEMBRA	2					
81	90480–01558	TAPON	1					
82	13S–28217–00	AMORTIGUADOR 1	1					
83	90269–06008	REMACHE	1					
84	90269–06081	REMACHE	1					
85	97707–50016	TORNILLO	3					
86	97702–50020	TORNILLO ROSCA HEMBRA	1					
87	13S–2836L–00	PANEL 2	1					
88	90269–06008	REMACHE	3					
89	90269–06002	REMACHE	1					
90	13S–2836M–00	PANEL 3	1					
91	90269–06008	REMACHE	2					
92	90269–06002	REMACHE	1					
93	90269–06008	REMACHE	1					
94	13S–2153E–00	EMBLEMA, YAMAHA	2					UR PARA DPBMC
	13S–2153E–10	EMBLEMA, YAMAHA	2					UR PARA BWC1
	13S–2153E–20	EMBLEMA, YAMAHA	2					UR PARA DNMG

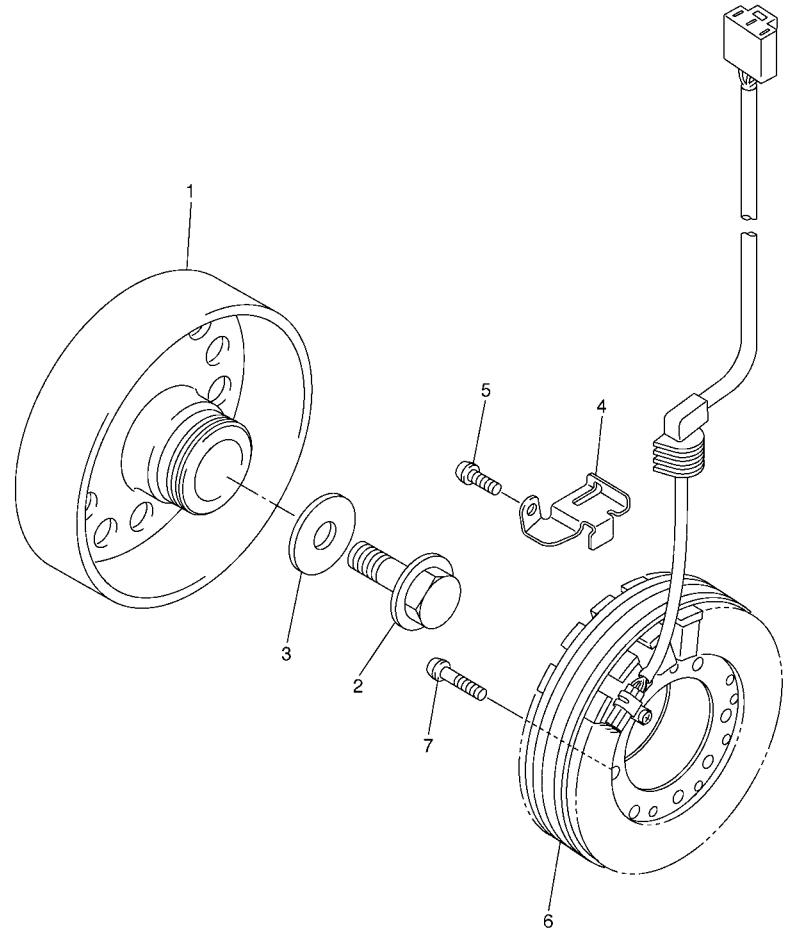

2C01300-E390

FIG. 39 GENERADOR

REF. Nº	CODIGO Nº	DESCRIPCION	13S1					OBSERVACIONES
1	2C0–81450–00	ROTOR COMPLETO	1					
2	90105–126A8	TORNILLO	1					
3	90201–12008	ARANDELA PLANA	1					
4	2C0–15484–00	GRAMPA 2	1					
5	90149–06082	TORNILLO DE REGLAJE	1					
6	2C0–81410–00	ESTATOR COMPLETO	1					
7	90149–06080	TORNILLO DE REGLAJE	3					

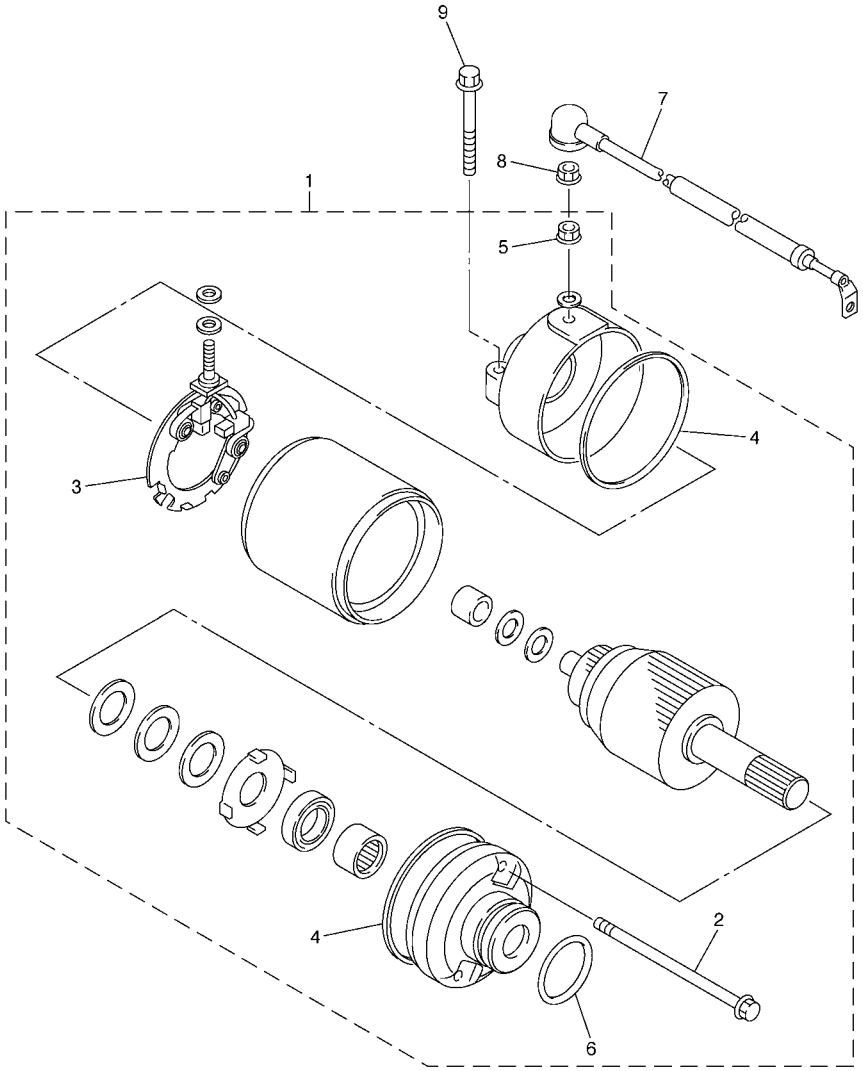

2C01300-E400

FIG. 40 MOTOR DE ARRANQUE

REF. Nº	CODIGO Nº	DESCRIPCION	13S1					OBSERVACIONES
1	2C0–81890–00	MOTOR DE ARRANQUE COMPLETO	1					
2	4WP–81826–00	.PERNO	2					
3	4WP–81801–00	.JUEGO DE ESCOBILLA	1					
4	4WP–81844–00	.EMPAQUE	2					
5	4XV–8182A–00	.TUERCA	1					
6	1FK–81847–00	.ANILLO GOMA	1					
7	2C0–81815–00	CABLE, MOTOR DE ARRANQUE	1					
8	4XV–8182A–00	TUERCA	1					
9	90105–06083	TORNILLO	2					

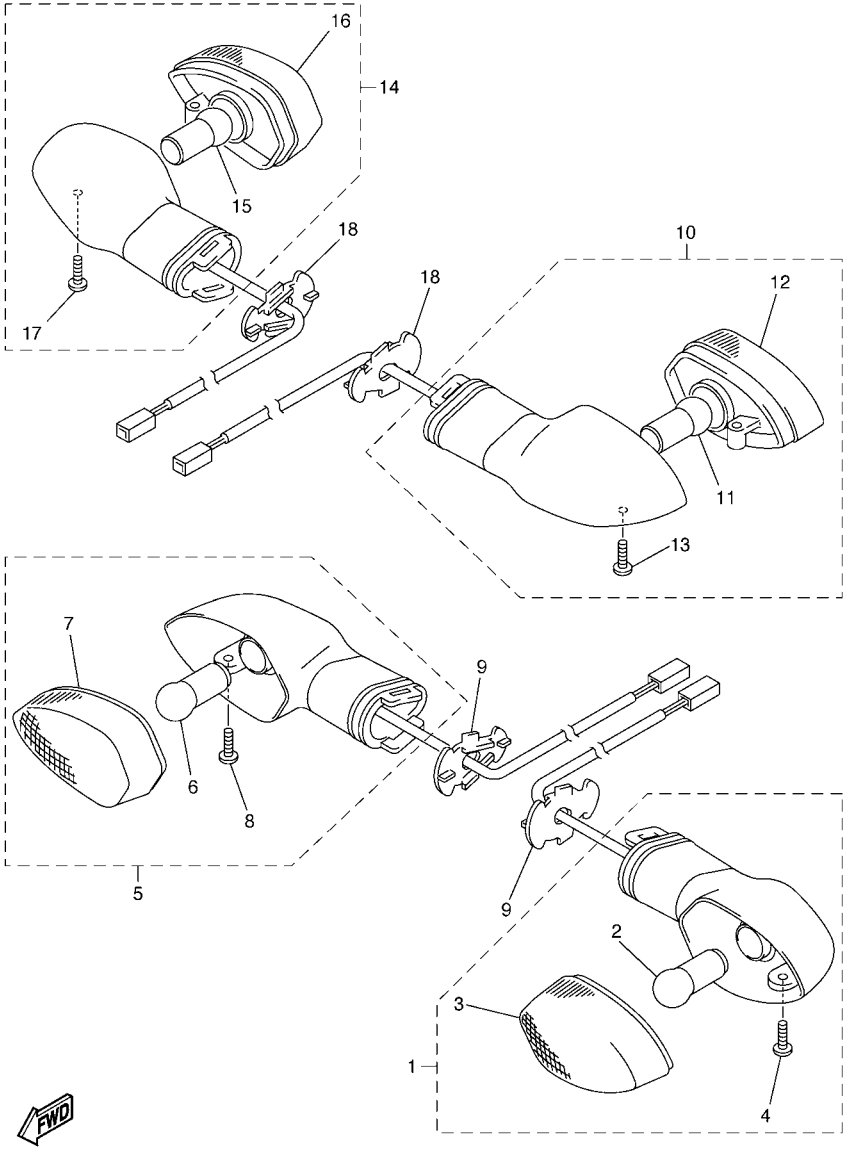

FIG. 41 LUZ DE DESTELLADOR

REF. Nº	CODIGO Nº	DESCRIPCION	13S1					OBSERVACIONES
1	2C0–83310–00	DESTELLADOR DE LUZ DELANT.	1					
2	2C0–83311–00	.BOMBILLA (12V-10W)	1					
3	2C0–8333A–00	.LENTES COMPLETO	1					
4	97702–40010	.TORNILLO ROSCA HEMBRA	1					
5	2C0–83320–00	DESTELLADOR DE LUZ DELANT.	1					
6	2C0–83311–00	.BOMBILLA (12V-10W)	1					
7	2C0–8334A–00	.LENTES COMPLETO	1					
8	97702–40010	.TORNILLO ROSCA HEMBRA	1					
9	2C0–83318–00	SOPORTE DE DESTELLADOR 1	2					
10	2C0–83330–00	DESTELLADOR DE LUZ TRAS.COMPL.	1					
11	2C0–83311–00	.BOMBILLA (12V-10W)	1					
12	2C0–8334A–00	.LENTES COMPLETO	1					
13	97702–40010	.TORNILLO ROSCA HEMBRA	1					
14	2C0–83340–00	DESTELLADOR DE LUZ TRAS.COMPL.	1					
15	2C0–83311–00	.BOMBILLA (12V-10W)	1					
16	2C0–8333A–00	.LENTES COMPLETO	1					
17	97702–40010	.TORNILLO ROSCA HEMBRA	1					
18	2C0–83318–00	SOPORTE DE DESTELLADOR 1	2					

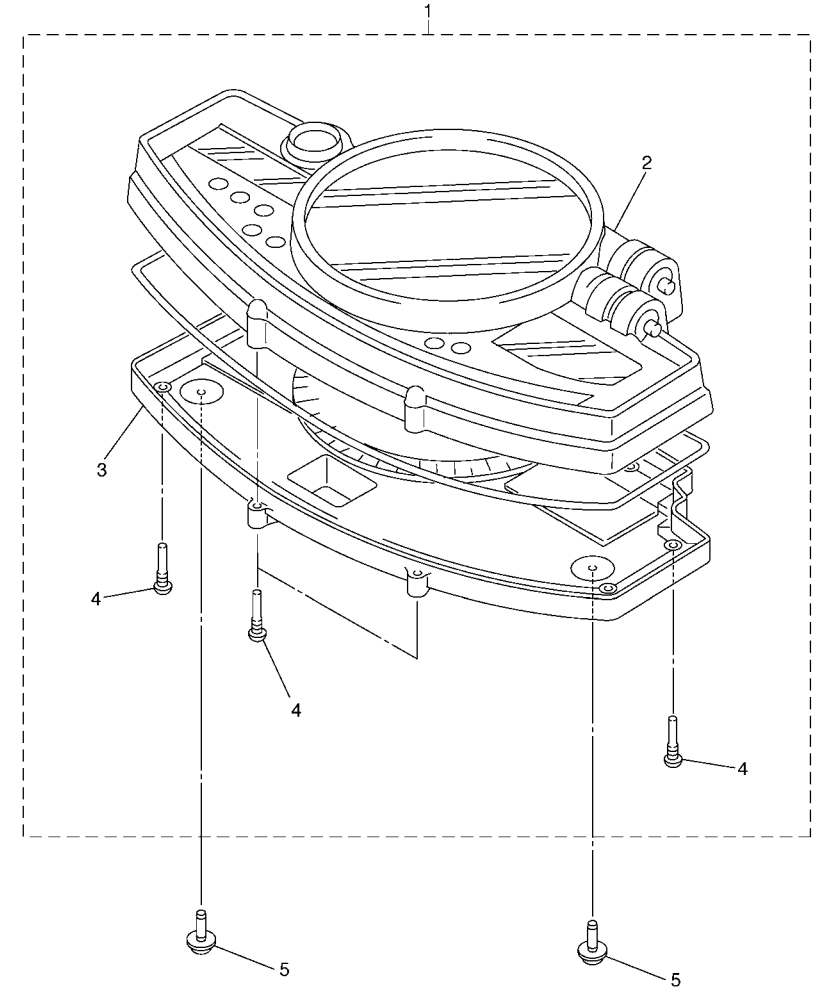

2C0B300-F420

FIG. 42 MEDIDOR

REF. Nº	CODIGO Nº	DESCRIPCION	13S1					OBSERVACIONES
1	13S–83500–00	METRO COMPLETO (KM/H)	1					
2	5VY–8353E–00	.CAJA DE MEDIDOR SUPERIOR	1					
3	5VY–83572–02	.CAJA DE VELOCIMETRO INFERIOR	1					
4	5PW–8352S–00	.TORNILLO	11					
5	90160–05006	TORNILLO REDONDO ROSCA HEMBRA	3					

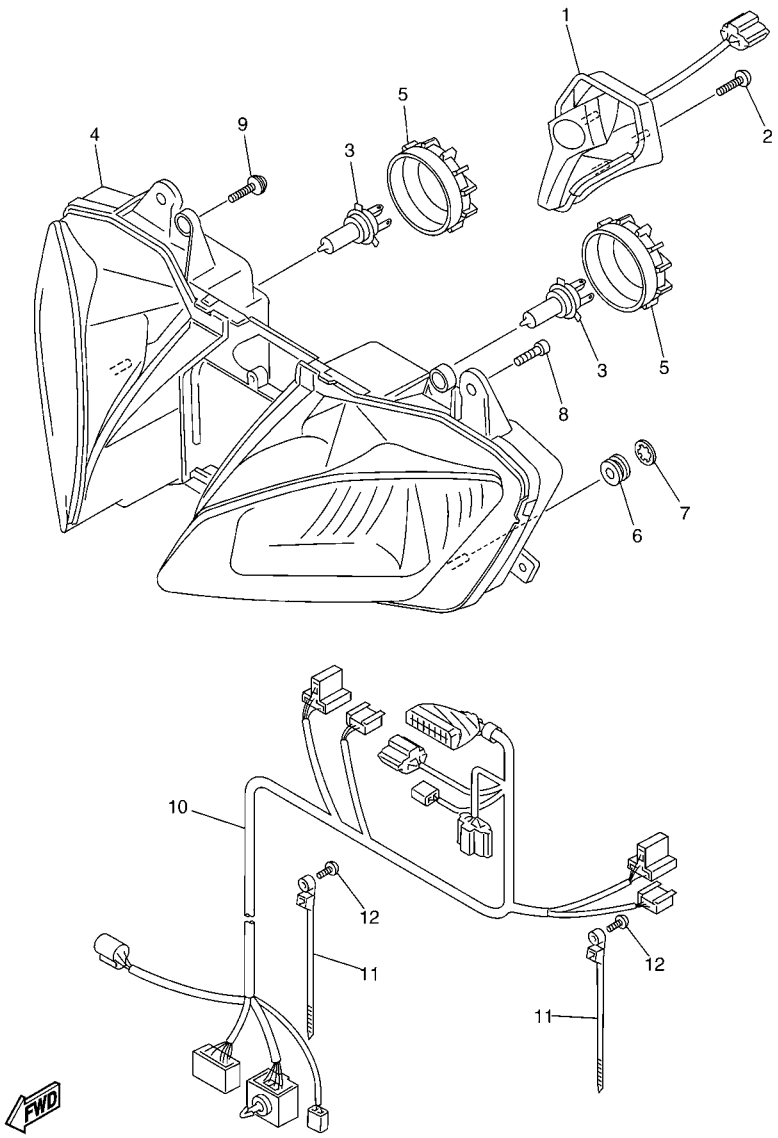

FIG. 43 FARO DELANTERO

REF. Nº	CODIGO Nº	DESCRIPCION	13S1					OBSERVACIONES
1	13S–84301–00	LUZ PILOTO COMPLETA 1	1					
2	97702–40016	TORNILLO ROSCA HEMBRA	3					
3	4SV–84314–00	BOMBILLA (12V-55W)	2					(H7)HALOGEN
4	13S–84303–00	UNIDAD DE FARO DELANTERO COMPL	1					
5	5SL–84397–00	CUBIERTA DE ENCASTRE	2					
6	90480–08264	TAPON	2					
7	90209–03274	ARANDELA DE SEPARACION	2					
8	97707–50016	TORNILLO	5					
9	90160–05006	TORNILLO REDONDO ROSCA HEMBRA	4					
10	13S–84359–00	CABLE DE FARO DELANTERO	1					
11	90464–47001	BRIDA	2					
12	97707–50016	TORNILLO	2					

FIG. 44 LUZ DE COLA

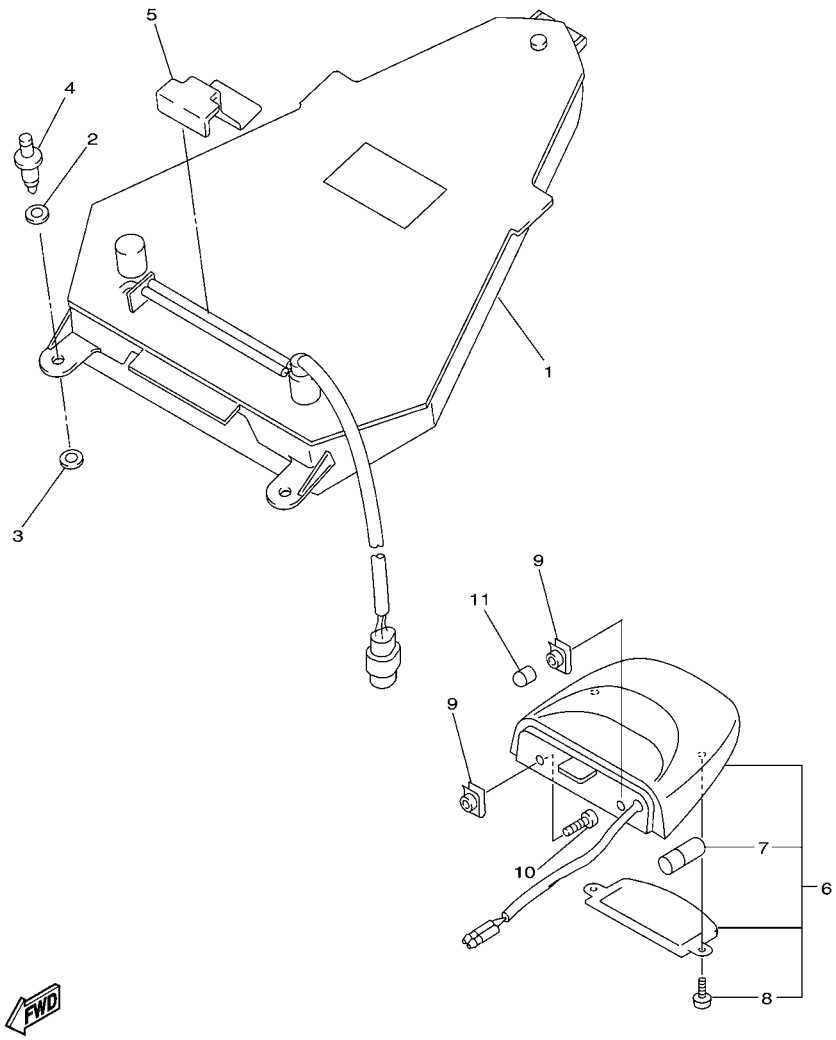

13S1300-G440

REF. Nº	CODIGO Nº	DESCRIPCION	13S1					OBSERVACIONES
1	13S–84710–00	UNIDAD FARO TRASERO COMPL.	1					
2	5SL–84753–00	AMORTIGUADOR	2					
3	13S–2173M–00	SELLO 3	2					
4	90269–06001	REMACHE	2					
5	2C0–2163F–00	CUBIERTA TRAS GUARDABARRO 3	1					
6	5VX–84745–01	UNIDAD DE LUZ DE LICENCIA COMP	1					
7	4HC–84744–00	.BOMBILLA (12V-5W)	1					
8	97706–04012	.TORNILLO, ROSCA CHAPA	2					
9	90183–05061	TUERCA DE RESORTE	2					
10	98902–05014	TORNILLO DE AJUSTE	2					
11	5VX–13569–01	TAPON CIEGO	1					

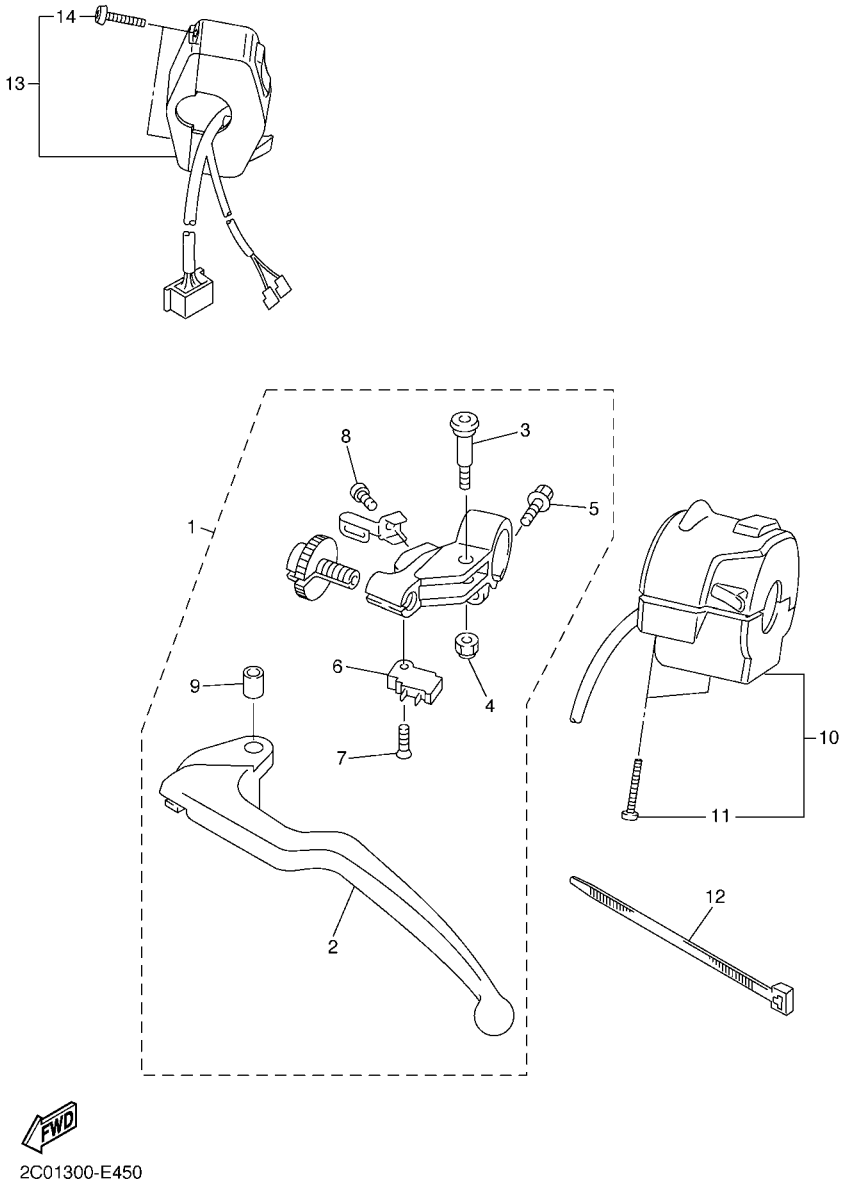

FIG. 45 INTERRUPTOR DE MANILLAR&PALANC

REF. Nº	CODIGO Nº	DESCRIPCION	13S1					OBSERVACIONES
1	2C0–82910–01	SOPORTE DE LEVA COMPLT 1	1					
2	5EB–83912–03	.PALANCA 1	1					
3	2C0–83945–00	.PERNO DE PALANCA	1					
4	95607–06200	.TUERCA DE AUTO-CIERRE	1					
5	95027–06020	.PERNO, DE BRIDA	1					
6	4XV–82917–01	.INTERRUPTOR	1					
7	98707–03016	.TORNILLO DE CABEZA PLANA	1					
8	98507–04010	.TORNILLO DE CABEZA PLANA	1					
9	5JJ–83913–00	.COLLAR DE PALANCA 1	1					
10	13S–83969–00	INTERRUPTOR DE MANIJA 5	1					
11	98507–05035	.TORNILLO DE CABEZA PLANA	2					
12	3MA–82591–00	BANDA	1					
13	13S–83975–00	INTERRUPTOR DE MANIJA 2	1					
14	98507–05022	.TORNILLO DE CABEZA PLANA	2					

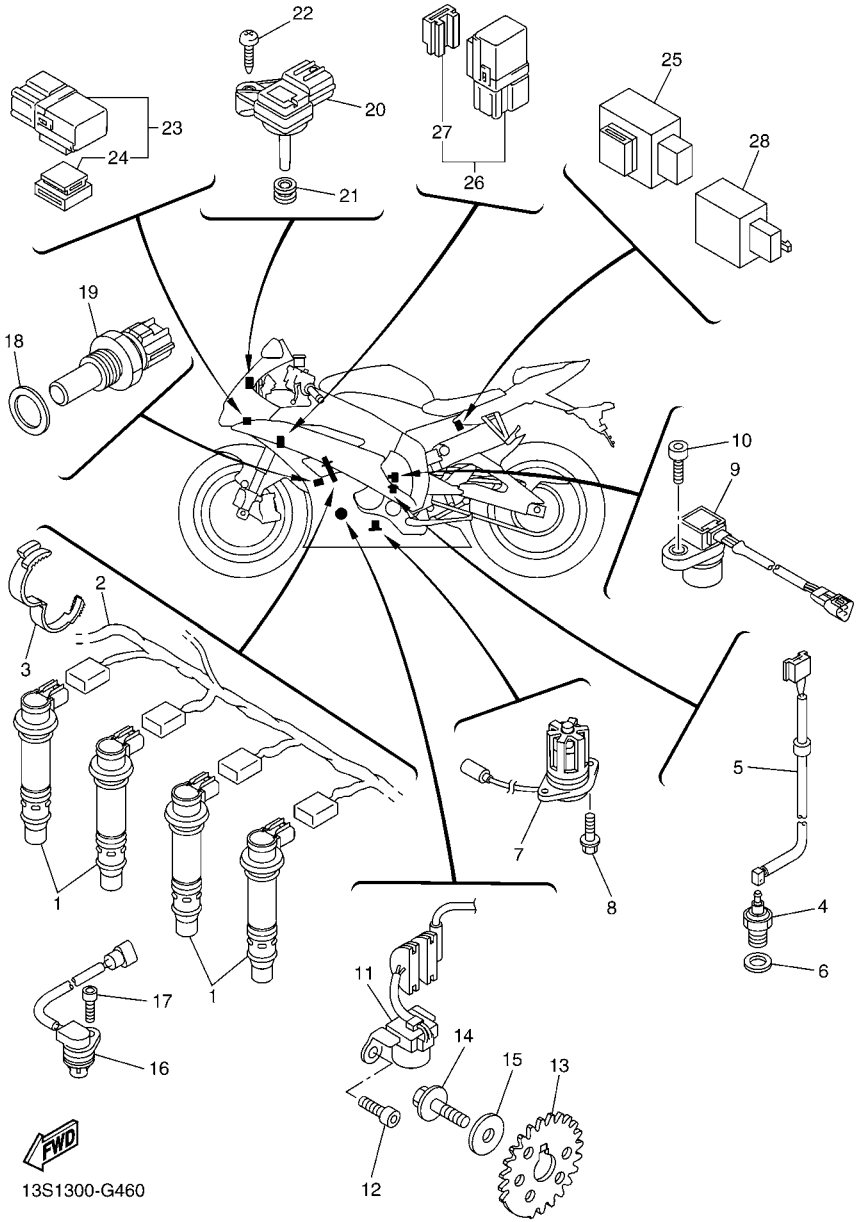

FIG. 46 EQUIPO ELECTRICO 1

REF. Nº	CODIGO Nº	DESCRIPCION	13S1					OBSERVACIONES
1	13S–82310–00	BOBINA DE ENCENDIDO COMPLETA	4					
2	2C0–82309–00	CABLE SUBCONDUCTOR	1					
3	90464–28003	BRIDA	1					
4	3GB–82540–01	INTERRUPTOR NEUTRAL COMPL	1					
5	2C0–82541–00	CABLE CONDUCTOR	1					
6	90430–10148	JUNTA	1					
7	5VX–85720–01	MEDIDOR DE NIVEL DE ACEITE	1					
8	95022–06016	PERNO, DE BRIDA	2					
9	4WM–83755–02	SENSOR DE VELOCI	1					
10	91312–06016	TORNILLO	1					
11	2C0–81670–00	RECOGEDOR COMPL.	1					
12	90110–06168	TORNILLO ALLEN	2					
13	2C0–81673–01	ROTOR	1					
14	90105–08113	TORNILLO	1					
15	90201–08054	ARANDELA PLANA	1					
16	5VY–85896–00	SENSOR DE LEVA	1					
17	90110–06175	TORNILLO ALLEN	1					
18	90201–12790	ARANDELA PLANA	1					
19	8CC–85790–01	TERMICA SENSORIO	1					
20	2C0–82380–00	SENSOR DE PRESION	1					
21	90480–08006	TAPON	1					
22	97702–50120	TORNILLO ROSCA HEMBRA	1					
23	5JJ–81950–20	RELE COMPLETO	2					
24	5JJ–81952–00	.SOSTEN DE RELE	1					
25	5VK–81950–40	RELE COMPLETO	1					
26	5EA–81950–20	RELE COMPLETO	1					
27	5EA–81952–00	.SOSTEN DE RELE	1					

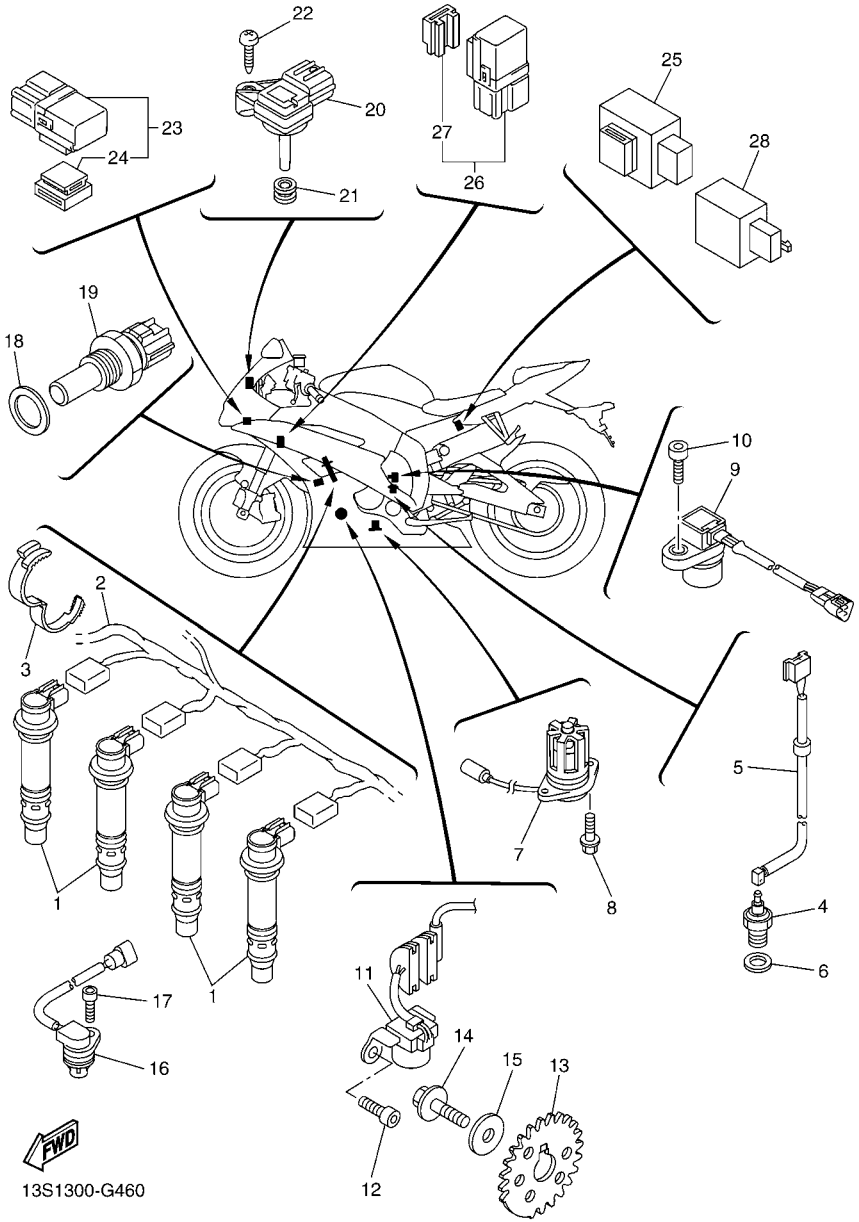

FIG. 46 EQUIPO ELECTRICO 1

REF. Nº	CODIGO Nº	DESCRIPCION	13S1					OBSERVACIONES
28	4GY–83350–00	RELE DE DESTELLADOR COMPL.	1					

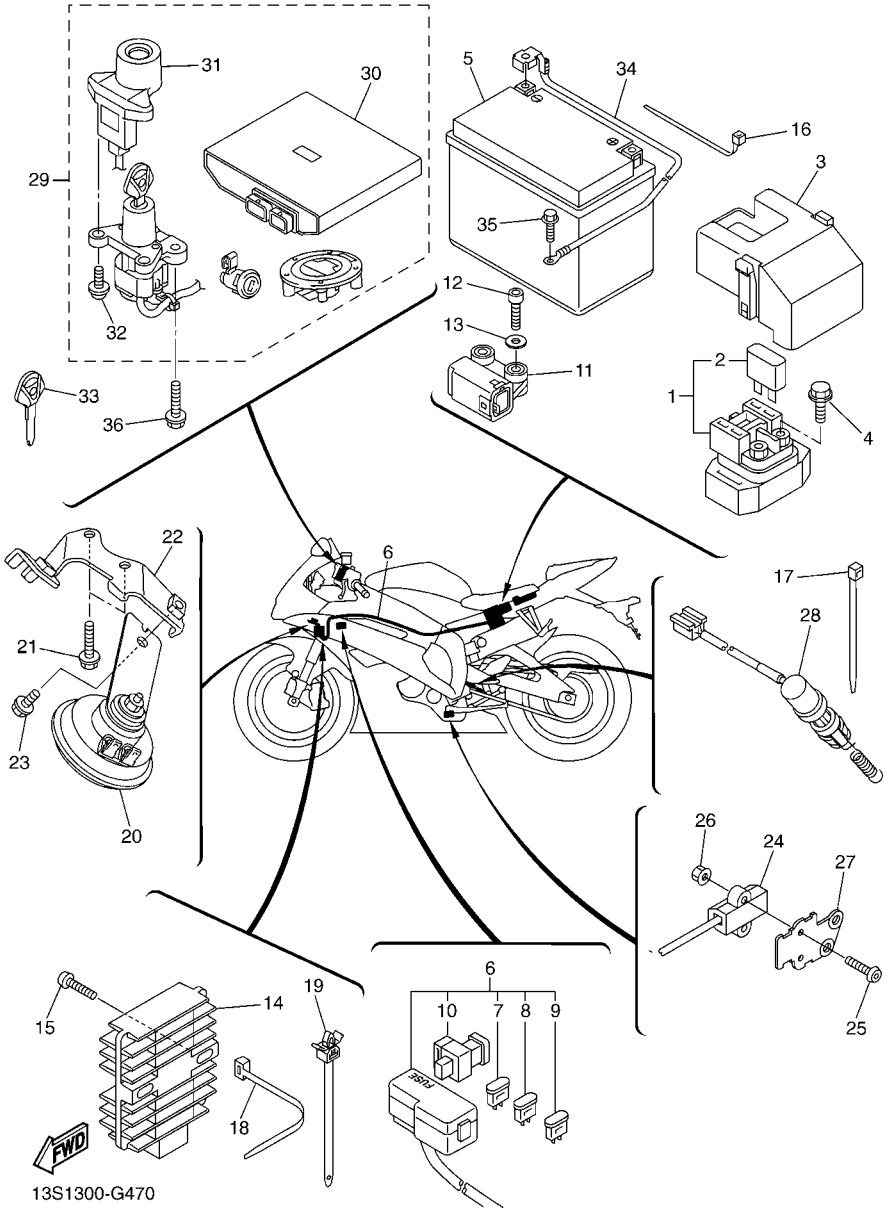

FIG. 47 EQUIPO ELECTRICO 2

REF. Nº	CODIGO Nº	DESCRIPCION	13S1					OBSERVACIONES
1	2C0–81940–00	CONJUNTO ARRANCADOR RELEVO	1					
2	36Y–82151–00	.FUSIBLE (15A-BL)	2					
3	5SL–82119–10	CUBIERTA DE CABLE CONDUCTOR	1					
4	95022–06008	PERNO, DE BRIDA	2					
5	5VY–82100–00	BATERIA COMPLETA(YUASA YTZ10S)	1					
6	13S–82590–00	CONJUNTO DE CABLES	1					
7	5JJ–82151–10	.FUSIBLE (15A-BL)	5					
8	5JJ–82151–00	.FUSIBLE (7.5A-BL)	4					
9	5JJ–82151–30	.FUSIBLE (10A-BL)	2					
10	5JW–82151–10	.FUSIBLE (50A)	1					
11	5PS–82576–01	SENSOR ANGULO DE INCLINATION	1					
12	91317–04025	PERNO	2					
13	90201–042E0	ARANDELA PLANA	2					
14	4XY–81960–00	RECTIFICADOR Y REGULADOR	1					
15	92017–06025	PERNO	2					
16	90465–15011	BRIDA	2					
17	90464–32060	BRIDA	2					
18	90464–16061	BRIDA	4					
19	90464–12036	BRIDA	2					
20	4TH–83371–00	BOCINA	1					
21	95812–06012	TORNILLO DE REBORDE	1					
22	13S–23377–00	SOPORTE DE BOCINA	1					
23	95822–06020	TORNILLO DE REBORDE	2					
24	13S–82566–70	INTERRUPTOR	1					
25	92012–05025	PERNO	2					
26	95602–05200	TUERCA DE AUTO-CIERRE	2					
27	2C0–27961–00	SOPORTE	1					

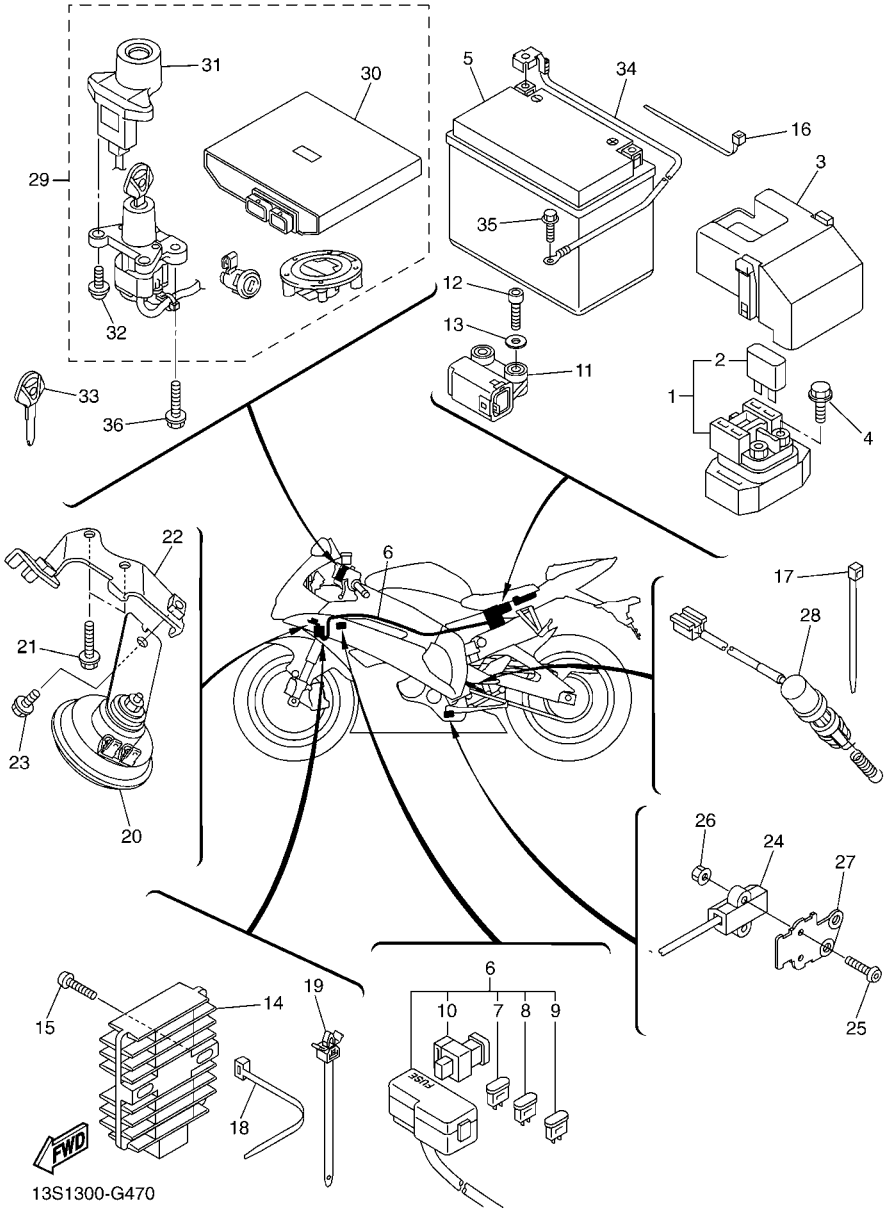

FIG. 47 EQUIPO ELECTRICO 2

REF. Nº	CODIGO Nº	DESCRIPCION	13S1					OBSERVACIONES
28	13S–82530–00	INTERRUPTOR DE PARADA COMPLETO	1					
29	13S–W8250–00	JUEGO DE INMOVILIZADOR	1					
30	13S–8591A–00	.UNIDAD CONTROL	1					
31	2C0–8255P–00	.UNIDAD INMOVILIZADORA	1					
32	5SL–82113–01	.TORNILLO	2					
33	5SL–82511–08	BLANK KEY	1					AP
34	2C0–82116–00	CABLE CONDUCTOR NEGATIVO	1					
35	91380–06012	PERNO	1					
36	90109–080G5	PERNO	2					

INDICE NUMERICO

CODIGO Nº	REF. Nº
2C0–11101–01	B – 2
5VY–1111G–00	B – 2
2C0–11133–11	B – 2
2C0–11134–11	B – 2
2C0–11165–00	C – 6
2C0–11181–01	B – 2
2C0–11191–00	B – 2
2C0–11193–00	B – 2
214–11198–01	B – 12
13S–1133E–01	C – 4
13S–1133F–01	C – 4
2C0–11411–00	B – 3
13S–11416–00	B – 3
13S–11416–10	B – 3
13S–11416–20	B – 3
13S–11416–30	B – 3
13S–11416–A0	B – 3
2C0–11603–00	B – 3
13S–11631–00	B – 3
2C0–11633–00	B – 3
13S–11650–00	B – 3
2C0–11654–00	B – 3
13S–11656–00	B – 3
13S–11656–10	B – 3
13S–11656–20	B – 3
13S–11656–30	B – 3
13S–12111–00	B – 4
13S–12113–00	B – 4
13S–12114–00	B – 4
2C0–12116–00	B – 4
13S–12117–00	B – 4
1WG–12118–00	B – 4
4SV–12119–00	B – 4
2C0–12121–00	B – 4
5EB–12153–09	B – 5
5EB–12153–20	B – 5
5EB–12153–30	B – 5
1HX–12168–F0	B – 4
1HX–12168–H1	B – 4
1HX–12168–K1	B – 4
1HX–12168–M1	B – 4
1HX–12168–R1	B – 4
1HX–12168–U1	B – 4
1HX–12168–W1	B – 4
1HX–12168–Y1	B – 4
1HX–12169–11	B – 4
1HX–12169–31	B – 4
1HX–12169–50	B – 4

CODIGO Nº	REF. Nº
1HX–12169–70	B – 4
1HX–12169–90	B – 4
1HX–12169–E0	B – 4
1HX–12169–G0	B – 4
1HX–12169–J0	B – 4
1HX–12169–L0	B – 4
1HX–12169–N0	B – 4
1HX–12169–T0	B – 4
13S–12170–00	B – 6
2C0–12176–00	B – 6
13S–12180–00	B – 6
13S–12210–00	B – 6
2C0–12213–00	B – 6
5BE–12241–00	B – 2
2C0–12251–00	B – 6
13S–12252–00	B – 6
2C0–12405–00	B – 8
2C0–12405–10	B – 8
5SL–12410–00	B – 8
2C0–12413–00	B – 8
2C0–12420–00	B – 7
2C0–12421–00	B – 7
2C0–12428–01	B – 7
2C0–12438–00	B – 7
2C0–1243A–00	B – 7
2C0–1243F–00	B – 9
2C0–1244E–00	B – 9
2C0–12450–00	B – 7
13S–12461–00	B – 8
5SL–12462–00	B – 8
5EB–12469–00	B – 7
5GV–1246E–00	B – 8
2C0–1246H–00	B – 10
2C0–12481–00	B – 8
2C0–12491–00	B – 9
2C0–12535–00	B – 9
2C0–12551–00	B – 9
2C0–12552–00	B – 8
2C0–12576–00	B – 7
2C0–12577–00	B – 7
2C0–12578–00	B – 8
2C0–12579–00	B – 9
2C0–12581–00	B – 7
2C0–12582–00	B – 9
2C0–12588–00	B – 7
2C0–12589–00	B – 9
13S–12659–00	B – 8
2C0–12659–00	B – 8

CODIGO Nº	REF. Nº
13S–12668–00	B – 10
2C0–12668–00	B – 8
13S–12669–00	B – 9
5GJ–12675–00	B – 8
13S–12678–00	B – 8
13S–12679–00	D – 4
2C0–12682–00	B – 14
13S–12688–00	B – 8
5EB–12822–00	B – 12
5EB–13161–00	B – 11
2C0–1316E–00	B – 11
2C0–13300–00	B – 11
4SV–13310–00	B – 11
2C0–13410–00	B – 11
2C0–13414–01	B – 12
2C0–13415–00	B – 11
2C0–13416–00	B – 11
2C0–13417–00	B – 12
5VX–13418–00	C – 6
5GH–13440–20	B – 12
13S–13470–00	B – 12
5JW–13473–00	B – 12
5EB–13475–00	B – 12
2C0–13490–00	B – 12
2C0–13532–00	B – 15
68V–13533–00	B – 15
8FP–13556–00	B – 15
5VX–13569–01	G – 2
2C0–13586–00	B – 13
2C0–13596–00	B – 13
13S–13750–00	B – 15
13S–13761–00	B – 13
2C0–13761–00	B – 15
13S–13767–00	B – 14
2C0–13881–00	B – 13
2C0–13898–00	B – 11
4C8–13907–00	E – 2
13S–13930–00	B – 15
13S–13938–00	B – 13
13S–13971–01	B – 15
2C0–14105–00	B – 15
4KM–14137–00	B – 15
8A7–14139–00	B – 15
5PS–14147–00	B – 14
	B – 15
895–14169–00	B – 15
2C0–14216–00	B – 15
5FL–14216–00	B – 15

CODIGO Nº	REF. Nº
8CC–14216–10	B – 15
3XV–14251–00	B – 15
5FL–14348–10	B – 15
2C0–14409–00	B – 13
13S–1440B–00	B – 13
13S–14411–00	B – 13
13S–14421–00	B – 13
2C0–14425–00	B – 13
13S–14445–00	B – 14
13S–14450–00	B – 13
2C0–14452–00	B – 14
13S–14457–00	B – 13
13S–14462–00	B – 13
2C0–14467–00	B – 13
13S–1446R–00	B – 14
13S–14490–00	B – 13
13S–14498–00	B – 13
13S–14610–00	C – 4
4FM–14613–00	C – 4
2C0–14618–00	C – 4
2C0–14623–00	C – 4
13S–14718–00	C – 4
5JW–14723–00	C – 3
2C0–14725–00	C – 4
5VY–14747–00	E – 14
13S–14753–00	C – 4
5VY–1482K–00	B – 2
2C0–14840–00	C – 3
2C0–14881–00	C – 3
13S–14882–00	B – 13
5SL–14890–00	B – 2
5VY–14899–00	B – 2
22U–14952–00	B – 15
2C0–15100–01	C – 6
5EB–15155–00	C – 6
2C0–15163–00	C – 12
13S–15189–00	C – 6
36Y–15189–00	C – 6
2C0–15362–00	C – 7
3F9–15362–00	C – 8
13S–15373–00	B – 13
2C0–15377–00	C – 7
1UF–15379–00	D – 8
2C0–15411–01	C – 8
2C0–15413–01	C – 6
2C0–15416–00	C – 8
2C0–15418–00	C – 8
2C0–15421–00	C – 8

CODIGO Nº	REF. Nº
2C0–15441–00	C – 8
2C0–15451–01	C – 8
2C0–15456–01	C – 8
2C0–15461–01	C – 8
2C0–15462–01	C – 6
2C0–15484–00	F – 11
2C0–15512–00	C – 9
2C0–15515–00	C – 9
5MT–15521–00	C – 9
2C0–15536–00	C – 9
2C0–15580–00	C – 9
2C0–16150–00	C – 10
2C0–16154–00	C – 10
1AE–16164–00	C – 10
2C0–16164–00	C – 10
2C0–16181–00	C – 10
4FN–16321–00	C – 10
5SL–16321–00	C – 10
5LV–16321–20	C – 10
168–16324–00	C – 10
3J2–16324–00	C – 10
168–16325–00	C – 10
2C0–16340–00	C – 11
132–16346–00	C – 15
2C0–16351–00	C – 10
2C0–16356–00	C – 10
2C0–16360–00	C – 10
2C0–16370–00	C – 10
2C0–16377–00	C – 10
2C0–16382–00	C – 11
2C0–16384–00	C – 10
13S–16539–00	C – 10
13S–17121–00	C – 12
13S–17131–00	C – 12
13S–17151–00	C – 12
2C0–17161–00	C – 12
2C0–17211–00	C – 13
13S–17221–00	C – 12
2C0–17231–00	C – 13
2C0–17241–00	C – 12
13S–17251–00	C – 13
2C0–17261–00	C – 12
2C0–17411–00	C – 12
2C0–17421–00	C – 12
2C0–17460–00	C – 13
2C0–18101–00	C – 15
2C0–18110–01	C – 15
5PW–18112–00	C – 15

CODIGO Nº	REF. Nº
5EB–18113–00	C – 15
2C0–18115–00	C – 15
5LV–18116–00	C – 15
1D7–18127–00	C – 15
2C0–18140–00	C – 15
2C0–18144–00	C – 15
2H9–18154–00	C – 15
4XV–18154–00	C – 15
2C0–18175–00	C – 15
2C0–18511–00	C – 14
2C0–18512–00	C – 14
2C0–18513–00	C – 14
2C0–18531–00	C – 14
2C0–18535–00	C – 14
2C0–18536–00	C – 14
2C0–18540–00	C – 14
136–18542–00	C – 14
2C0–18562–00	C – 14
13S–2110M–00	D – 3
13S–21110–00	D – 3
13S–2111D–00	D – 3
13S–21131–00	D – 6
2C0–2116J–00	C – 4
2C0–2116K–00	E – 14
2C0–2116L–00	E – 14
5VY–2117K–01	E – 4
13S–2117V–00–P0	F – 7
13S–2117V–00–P1	F – 7
13S–2117V–00–P2	F – 7
13S–2117W–00–P0	F – 7
13S–2117W–00–P1	F – 7
13S–2117W–00–P2	F – 7
13S–21190–00	D – 3
13S–21228–00	F – 2
2C0–21249–00	C – 3
2C0–21279–00	D – 3
2C0–21339–00	D – 15
2C0–21370–00	D – 6
13S–21376–00	D – 5
13S–2137K–00	F – 9
13S–2137L–00	F – 10
13S–2137U–00	F – 9
13S–2137V–00	F – 10
13S–21414–00	D – 3
13S–21424–00	D – 3
13S–21435–00	D – 3
13S–21445–00	C – 5
13S–21446–00	C – 5

INDICE NUMERICO

CODIGO Nº	REF. Nº
13S–2144G–00	E – 14
2C0–21485–00	E – 13
2C0–21486–00	D – 3
2C0–21511–00–P0	D – 5
2C0–21511–00–P1	D – 5
2C0–21511–00–P5	D – 5
13S–2153E–00	F – 10
13S–2153E–10	F – 10
13S–2153E–20	F – 10
13S–21566–00	D – 3
2C0–21566–00	D – 3
	D – 15
13S–21567–00	D – 3
2C0–21567–00	D – 3
4C8–21568–00	E – 3
13S–21575–00	D – 6
13S–21611–00–P0	D – 5
13S–21611–00–P1	D – 5
13S–21611–00–P2	D – 5
13S–21615–00	D – 6
2C0–21629–00	D – 7
13S–2162R–00–P0	D – 6
13S–2162R–00–P1	D – 6
13S–21639–00	D – 8
4G0–21639–00	D – 6
51Y–21639–00	D – 5
	F – 5
2C0–2163A–00	D – 7
2C0–2163E–00	D – 7
2C0–2163F–00	G – 2
13S–21640–00	D – 7
13S–21649–00	D – 5
2C0–21650–00	D – 9
13S–21652–00	D – 5
5VY–21668–00	D – 10
13S–21669–00	D – 6
13S–216A2–00	D – 6
13S–216A3–00	D – 6
13S–216A4–00	D – 6
13S–21710–00–P0	D – 8
13S–21710–00–P1	D – 8
13S–21710–00–P2	D – 8
4D9–21717–00	D – 6
13S–2171A–00–P0	E – 2
13S–2171A–00–P1	E – 2
13S–2171A–00–P2	E – 2
13S–2171L–00	D – 8
13S–21720–00–P0	D – 8

CODIGO Nº	REF. Nº
13S–21720–00–P1	D – 8
13S–2172P–00	D – 5
13S–21732–00	D – 6
13S–21735–00	D – 5
13S–2173E–00	D – 8
13S–2173F–00	D – 8
13S–2173M–00	G – 2
13S–2173N–00	D – 6
13S–2173P–00	D – 5
13S–21746–00	D – 4
2C0–21746–00	D – 3
13S–2174X–00	D – 3
5PW–2174X–00	D – 8
2C0–2174Y–00	D – 3
5VY–2176V–00	E – 4
4J2–21778–00	D – 8
2C0–2177F–00	C – 4
2C0–21816–00	B – 9
2C0–21823–00	C – 8
26H–21828–00	B – 9
2C0–21871–00	B – 9
2C0–21875–00	B – 9
13S–22110–00	D – 9
2C0–22128–00	D – 9
2C0–22141–10	D – 10
2C0–22151–00	D – 9
2C0–2217A–00	D – 9
2C0–2217M–00	D – 9
2C0–22184–00	D – 9
13S–22210–00	D – 11
13S–22210–10	D – 11
13S–22219–00	D – 11
2C0–22241–00	D – 3
13S–22243–00	D – 11
2C0–22252–00	D – 10
2C0–22311–00	D – 9
2C0–228A0–00	D – 9
2C0–228B0–00	D – 9
13S–23102–00	D – 13
13S–23102–10	D – 13
13S–23103–00	D – 13
13S–23103–10	D – 13
13S–23106–00	D – 13
13S–23106–10	D – 13
13S–23110–00	D – 13
13S–23111–00	D – 13
3VD–23115–00	D – 13
13S–23118–00	D – 13

CODIGO Nº	REF. Nº
13S–23120–00	D – 13
13S–23141–00	D – 13
13S–23142–00	D – 13
2C0–23143–00	D – 13
3VD–23144–00	D – 13
5VU–23145–00	D – 13
3VD–23156–00	D – 13
13S–23170–00	D – 13
13S–2332N–00	D – 13
13S–23340–00	D – 14
13S–23377–00	G – 6
2C0–23389–00	D – 12
13S–23393–00	D – 13
4XV–23415–01	D – 12
4XV–23418–00	D – 12
4XV–2341B–00	D – 12
4JH–23434–00	E – 10
13S–23435–00	D – 12
3FV–23462–00	D – 14
2H9–23469–00	E – 10
13S–23808–00	D – 12
13S–24106–00	E – 3
13S–24108–00	E – 3
5PW–2411J–01	E – 3
13S–24135–00	E – 2
2C0–24136–10	C – 6
5SL–2413B–00	D – 15
2C0–2413Y–00	D – 15
13S–24140–00	D – 5
13S–24145–00	E – 3
2C0–24145–00	E – 3
4C8–2414H–00	E – 3
2C0–2414J–00	E – 2
4C8–2414J–00	E – 3
2C0–2414N–00	E – 2
2C0–2414P–00	E – 3
13S–24181–00	E – 2
4FM–24181–00	C – 4
5VY–24181–00	D – 15
2C0–24182–00	D – 3
13S–24183–00	F – 8
5SL–24183–00	D – 15
5VY–24183–00	D – 15
2C0–24184–00	E – 3
5VY–24191–00	D – 15
5VY–24192–00	D – 15
13S–24240–00	D – 15
13S–24244–00	E – 3

CODIGO Nº	REF. Nº
13S–24245–00	D – 15
13S–24245–10	D – 15
13S–24313–00	E – 2
13S–24315–00	E – 2
13S–24316–00	E – 2
13S–24317–00	E – 2
68V–24376–00	B – 15
5JW–24486–00	E – 2
13S–24491–00	E – 2
5JJ–24602–00	D – 15
5YT–24665–00	D – 6
13S–24710–00	E – 4
13S–24710–10	E – 4
13S–24711–00	E – 4
13S–24711–10	E – 4
5SL–24723–00	E – 4
13S–24725–00	E – 4
13S–24750–00	E – 4
13S–24750–10	E – 4
2C0–24780–00	E – 4
13S–2478E–00	E – 4
2C0–24792–00	E – 4
2C0–24825–00	E – 4
13S–24847–00	E – 4
4XV–25117–00	E – 5
4XV–25118–00	E – 5
5SL–25168–00–0X	E – 5
5SL–25168–00–8L	E – 5
2C0–25181–00	E – 5
4XV–25186–00	E – 5
5PW–25188–00	E – 5
4XV–25317–00	E – 7
5SL–25327–00	E – 7
5SL–25338–00–0X	E – 7
5SL–25338–00–8L	E – 7
2C0–25364–00	E – 7
5SL–25366–00	E – 7
5SL–25367–00	E – 7
4XV–25376–00	E – 7
5SL–25376–00	E – 7
2C0–25379–00	E – 8
2C0–25381–10	E – 7
5SL–25383–00	E – 7
2C0–25388–00	E – 8
2C0–25389–00	E – 8
5MT–25398–00	E – 5
	E – 7
5MT–25398–10	E – 5

CODIGO Nº	REF. Nº
5MT–25398–10	E – 7
5MT–25398–20	E – 5
	E – 7
2C0–25445–20	E – 7
13S–2580T–00	E – 6
13S–2580T–10	E – 6
13S–2580U–00	E – 6
13S–2580U–10	E – 6
2C0–2580W–00	E – 9
13S–2581T–00	E – 6
5SL–25827–00	E – 9
5SL–25827–10	E – 9
5SL–25828–00	E – 9
4ML–2582A–50	F – 2
5SL–2582W–00	E – 9
5SL–25838–00	E – 9
5VY–2583B–00	E – 6
2C0–2583V–01	F – 2
4PX–25852–00	F – 2
5VY–25852–00	E – 11
2VN–25854–00	F – 2
5VY–25854–00	E – 11
2VN–25855–00	F – 2
5VY–25855–00	E – 11
13S–2585H–00	D – 3
5VS–2585H–00	E – 11
2VN–25866–00	F – 2
5VS–25867–00	E – 11
5VS–2586F–00	E – 11
13S–25872–00	E – 11
2C0–25874–00	F – 2
2C0–25886–00	E – 11
13S–25887–00	E – 11
2C0–25894–00	F – 2
5SL–25894–20	E – 11
2C0–25895–00	F – 2
3FV–2589A–00	F – 2
13S–2589E–00	E – 11
5VY–2589F–01	E – 11
5VY–2589G–00	E – 11
5VY–2589H–00	E – 11
5SL–25914–00	E – 9
5DH–25916–00	E – 9
3JD–25917–00	E – 9
5SL–25917–00	E – 9
13S–25919–00	E – 6
5SL–25919–00	E – 9
2C0–25921–00	E – 9

CODIGO Nº	REF. Nº
4SV–25924–00	E – 6
8CR–25924–00	E – 9
3GM–25925–00	E – 6
5SL–25926–00	E – 9
5VY–25975–00	E – 11
13S–26121–00	E – 10
13S–26122–00	E – 10
2C0–26240–00	E – 10
2C0–26241–00	E – 10
4XV–26246–00	E – 10
13S–26279–00	D – 12
13S–26280–00	F – 5
5VY–26281–00	E – 10
2C0–26282–00	E – 10
13S–26290–00	F – 5
13S–26292–00	E – 11
13S–26298–00	F – 5
13S–26302–00	E – 10
5VS–26332–00	E – 11
2C0–26335–00	E – 10
2C0–27211–00	F – 2
4XV–27222–01	F – 2
2C0–27263–00	E – 13
2C0–27311–00	E – 13
2C0–27321–00	E – 13
2C0–27351–00	E – 13
2C0–27414–00	E – 13
2C0–27415–00	E – 13
13S–27417–00	E – 15
2C0–2741L–00	E – 15
2C0–27420–00	E – 14
2C0–2742L–00	E – 15
5JJ–27431–00	E – 15
4BP–27434–01	D – 2
2C0–27435–00	E – 14
5JJ–27437–01	E – 15
5JJ–27441–00	E – 15
2C0–27442–00	E – 13
2C0–27443–00	E – 14
2C0–27445–00	E – 14
5GM–27445–00	D – 6
13S–27446–00	E – 14
2C0–27451–00	E – 13
2C0–27453–00	E – 13
2C0–27491–00	E – 14
2C0–27961–00	G – 6
2C0–28100–00	D – 6
2C0–28110–00	D – 7

INDICE NUMERICO

CODIGO Nº	REF. Nº
4FM–28135–00	D – 7
4XV–2814F–00	D – 7
13S–28199–S0	D – 6
13S–28217–00	F – 9
2C0–28217–00	F – 5
3P6–28217–00	F – 4
13S–28219–00	F – 8
13S–28227–00	F – 4
2C0–28227–00	F – 5
13S–28229–00	F – 9
13S–28237–00	F – 4
2C0–28237–00	D – 8
13S–28328–00	F – 6
13S–28328–10	F – 6
13S–2832L–00	F – 5
13S–2833A–00	D – 4
13S–2833E–00	D – 4
2C0–28342–01	F – 5
13S–28356–00	F – 5
13S–2835G–00–P0	F – 4
13S–2835G–00–P1	F – 4
13S–2835G–00–P2	F – 4
13S–2835H–00–P0	F – 4
13S–2835H–00–P1	F – 4
13S–2835H–00–P2	F – 4
13S–28365–00–P0	F – 4
13S–2836A–00	B – 12
4KN–2836B–10	D – 8
13S–2836E–00	B – 12
13S–2836F–00	E – 13
13S–2836G–00	F – 10
13S–2836H–00	B – 10
13S–2836K–00	F – 4
13S–2836L–00	F – 10
13S–2836M–00	F – 10
13S–2836U–00	F – 8
13S–28371–00	F – 4
2C0–28371–00	F – 5
13S–2837L–00	F – 5
13S–2837M–00	F – 5
13S–28381–00	F – 4
13S–28385–00–P0	F – 8
13S–2838G–00	F – 8
13S–2838R–00	F – 5
13S–2838T–00	F – 5
13S–28391–00	F – 8
13S–28391–10	F – 8
13S–28391–20	F – 8

CODIGO Nº	REF. Nº
13S–28392–00	F – 9
13S–28392–10	F – 9
13S–28392–20	F – 9
13S–28395–00–P0	F – 9
13S–28415–00	F – 8
5SL–28416–00	D – 8
2C0–28425–00	E – 13
2C0–28428–00	E – 13
2C0–28429–00	E – 13
2C0–28455–00	F – 4
13S–2847R–00	F – 9
13S–2848K–00	F – 9
2C0–81410–00	F – 11
2C0–81450–00	F – 11
2C0–81670–00	G – 4
2C0–81673–01	G – 4
4WP–81801–00	F – 12
2C0–81815–00	F – 12
4WP–81826–00	F – 12
4XV–8182A–00	F – 12
4WP–81844–00	F – 12
1FK–81847–00	F – 12
2C0–81890–00	F – 12
2C0–81940–00	G – 6
5EA–81950–20	G – 4
5JJ–81950–20	G – 4
5VK–81950–40	G – 4
5EA–81952–00	G – 4
5JJ–81952–00	G – 4
4XY–81960–00	G – 6
5VY–82100–00	G – 6
5SL–82113–01	G – 7
2C0–82116–00	G – 7
5SL–82119–10	G – 6
13S–8212B–00	D – 5
133–82131–00	D – 5
36Y–82151–00	G – 6
5JJ–82151–00	G – 6
5JJ–82151–10	G – 6
5JW–82151–10	G – 6
5JJ–82151–30	G – 6
13S–821A1–00	D – 5
2C0–82309–00	G – 4
13S–82310–00	G – 4
13S–82318–00	B – 14
2C0–82380–00	B – 15
	G – 4
13S–82386–00	B – 15

CODIGO Nº	REF. Nº
5SL–82511–08	G – 7
13S–82530–00	G – 7
3GB–82540–01	G – 4
2C0–82541–00	G – 4
2C0–8255P–00	G – 7
13S–82566–70	G – 6
5PS–82576–01	G – 6
2C0–8258J–00	D – 3
13S–82590–00	G – 6
3MA–82591–00	E – 11
	G – 3
2C0–82910–01	G – 3
4XV–82917–01	G – 3
2C0–83310–00	F – 13
2C0–83311–00	F – 13
2C0–83318–00	F – 13
2C0–83320–00	F – 13
2C0–83330–00	F – 13
2C0–8333A–00	F – 13
2C0–83340–00	F – 13
2C0–8334A–00	F – 13
4GY–83350–00	G – 5
4TH–83371–00	G – 6
13S–83500–00	F – 14
4XV–83513–00	F – 5
5PW–8352S–00	F – 14
5VY–8353E–00	F – 14
5VY–83572–02	F – 14
4WM–83755–02	G – 4
5EB–83912–03	G – 3
5JJ–83913–00	G – 3
5SL–83922–10	E – 11
2C0–83945–00	G – 3
13S–83969–00	G – 3
13S–83975–00	G – 3
4HM–83980–00	E – 11
13S–84301–00	F – 15
13S–84303–00	F – 15
4SV–84314–00	F – 15
13S–84359–00	F – 15
5SL–84397–00	F – 15
13S–84710–00	G – 2
4HC–84744–00	G – 2
5VX–84745–01	G – 2
5SL–84753–00	D – 8
	G – 2
3Y6–85130–02	D – 7
5VX–85720–01	G – 4

CODIGO Nº	REF. Nº
8CC–85790–01	G – 4
2C0–85820–00	C – 4
13S–85870–00	B – 13
13S–85884–00	B – 15
13S–85885–00	B – 15
8FP–85886–00	F – 5
5VY–85896–00	G – 4
13S–8591A–00	G – 7
13S–8592A–00	C – 4
5VY–W0041–00	E – 11
5XT–W0042–60	F – 2
2C0–W0045–00	E – 6
5VX–W0046–00	E – 9
5PW–W0047–00	E – 6
5SL–W0047–00	E – 9
5PW–W0047–10	E – 6
1J3–W0048–00	E – 6
1UY–W0048–00	E – 9
5VY–W0048–00	E – 11
5PW–W0057–00	E – 6
5VY–W0057–00	E – 9
5PW–W0057–10	E – 6
2C0–W1242–00	B – 7
5VY–W2470–00	E – 4
5SL–W2587–00	E – 11
13S–W283U–00–P0	F – 8
13S–W283U–00–P1	F – 8
13S–W283U–00–P2	F – 8
13S–W283V–00–P0	F – 9
13S–W283V–00–P1	F – 9
13S–W283V–00–P2	F – 9
13S–W8250–00	G – 7
13S–Y2410–00–01	D – 15
13S–Y2410–00–02	D – 15
13S–YK241–00–P2	D – 15
90101–06025	D – 6
90101–08662	E – 13
90105–05014	E – 2
90105–06020	E – 13
	F – 10
90105–06027	B – 2
90105–06040	B – 8
90105–06041	E – 12
90105–06082	B – 7
90105–06083	F – 12
90105–07004	B – 6
90105–08054	C – 5
90105–08063	C – 4

CODIGO Nº	REF. Nº
90105–08113	G – 4
90105–08171	C – 5
	D – 3
90105–10017	D – 11
90105–12228	D – 3
90105–126A8	F – 11
90105–14002	E – 5
90109–06015	B – 12
	C – 6
	C – 8
90109–06031	C – 8
90109–06100	C – 6
90109–06171	D – 5
90109–06182	D – 7
90109–06207	F – 10
90109–06248	D – 8
90109–066F0	B – 2
	E – 14
90109–080G5	G – 7
90109–085G6	E – 14
90109–10017	D – 10
90109–103A9	E – 14
90109–12010	D – 9
90109–12011	D – 10
90110–05018	E – 10
90110–05028	E – 2
90110–05047	B – 13
90110–05112	E – 2
90110–06060	C – 8
90110–06094	B – 2
90110–06102	D – 9
90110–06106	B – 6
90110–06140	B – 7
90110–06156	C – 8
90110–06161	B – 11
	C – 6
90110–06168	G – 4
90110–06175	B – 2
	G – 4
90110–06182	C – 14
90110–06233	E – 2
90110–06258	E – 4
90110–06303	C – 8
90111–05003	D – 8
	F – 7
90111–05021	F – 5
90111–05025	E – 11
90111–05026	F – 3

CODIGO Nº	REF. Nº
90111–06019	C – 15
90111–06030	D – 5
90111–06038	D – 10
	F – 5
90111–06040	F – 7
90111–06041	E – 12
90111–06043	D – 5
90111–06051	E – 4
90111–06063	F – 7
90111–06064	B – 13
90111–06067	E – 14
90111–06071	C – 4
	D – 15
90111–06099	C – 4
90111–06104	D – 6
90111–08065	E – 13
90111–08066	E – 15
90116–10025	C – 6
90116–10026	C – 6
90116–10485	E – 7
90119–08083	C – 6
90119–08084	C – 6
90149–06043	E – 6
90149–06080	F – 11
90149–06082	C – 6
	F – 11
90149–06233	E – 14
90149–08009	E – 9
90150–05023	F – 4
90151–06024	C – 12
90154–05012	E – 2
90159–05035	B – 13
90159–06024	C – 10
90160–05006	F – 14
	F – 15
90170–08358	C – 15
90170–28419	D – 12
90176–06008	F – 5
90176–10075	B – 2
90179–05523	E – 2
	F – 4
90179–06010	D – 6
90179–06059	F – 10
90179–07001	B – 3
90179–08410	C – 4
90179–10006	B – 2
90179–12248	D – 3
90179–20011	C – 13

INDICE NUMERICO

CODIGO Nº	REF. Nº
90179–30691	D – 12
90183–04039	D – 5
90183–05042	F – 4
90183–05061	G – 2
90183–05074	E – 2
90183–05076	D – 4
	D – 8
	F – 4
	F – 7
90183–050A0	E – 11
90183–05M02	F – 8
90183–06069	B – 10
90185–05009	E – 13
90185–10009	E – 7
90185–12119	D – 9
90185–22002	D – 10
90185–24007	E – 7
90201–042E0	G – 6
90201–06063	D – 15
90201–06071	B – 9
90201–06380	E – 14
90201–06M31	C – 4
90201–08050	E – 13
90201–08054	G – 4
90201–08452	E – 10
90201–08784	D – 2
90201–087G2	C – 4
90201–10013	B – 2
90201–10021	E – 7
90201–10029	C – 11
90201–10035	E – 13
90201–113K2	B – 11
90201–12008	F – 11
90201–12013	C – 15
90201–12575	C – 15
90201–12790	G – 4
90201–127E1	C – 15
90201–146F9	E – 13
90201–177G4	C – 15
90201–20023	C – 13
90201–20278	C – 13
90201–22014	D – 10
90201–25020	E – 8
90201–281U8	D – 12
90201–33014	D – 10
90202–05180	D – 8
	F – 7
90202–10024	F – 10

CODIGO Nº	REF. Nº
90202–30235	D – 12
90206–12074	C – 15
90208–25002	C – 10
90209–03274	F – 15
90209–21332	C – 12
90209–21351	C – 12
90209–22352	C – 12
90209–25011	C – 12
90214–13002	E – 14
90214–25003	C – 12
90214–25004	C – 12
90240–08084	E – 14
90269–06001	D – 6
	D – 8
	G – 2
90269–06002	F – 10
90269–06008	D – 8
	E – 14
	F – 5
	F – 9
90269–06046	F – 4
90269–06081	F – 9
90269–06083	B – 10
90269–07001	D – 12
90269–07007	B – 9
	D – 9
	F – 8
90269–07008	D – 9
90269–07010	D – 3
	D – 5
90269–07076	D – 8
90338–06018	D – 5
	E – 3
90338–06134	F – 7
90338–15004	D – 3
90340–14132	B – 12
90340–18002	B – 2
90340–32004	C – 8
90387–05025	E – 13
90387–05028	F – 2
90387–05035	E – 3
90387–06022	D – 10
90387–06023	E – 14
90387–06048	D – 4
	D – 12
90387–06055	D – 15
90387–06057	D – 5
	E – 11

CODIGO Nº	REF. Nº
90387–06057	F – 7
90387–06143	D – 15
90387–0614M	B – 8
90387–06203	E – 2
90387–06215	E – 14
90387–062X0	D – 9
90387–063E6	C – 4
90387–064T3	F – 5
90387–06681	B – 9
90387–06697	E – 15
90387–066Y6	D – 15
90387–067K8	F – 7
90387–07391	B – 8
90387–08021	C – 4
90387–1012B	D – 10
90387–126Y1	D – 9
90387–127W0	D – 9
90387–21003	C – 12
90387–21004	C – 13
90387–25015	C – 12
90387–25016	C – 12
90387–250R3	C – 12
90387–28011	C – 12
90401–10012	E – 6
90401–10172	E – 12
	F – 2
90401–20145	B – 12
90430–06014	B – 7
90430–08119	B – 2
90430–08143	C – 8
90430–09002	B – 14
90430–10005	E – 12
	F – 2
90430–10148	G – 4
90445–19002	E – 13
90446–15386	F – 2
90450–22017	B – 9
90450–32001	B – 7
90450–35001	B – 7
	B – 8
90450–38002	B – 7
90450–56007	B – 13
90464–04001	E – 10
90464–09M31	E – 2
90464–10M38	B – 10
90464–12036	G – 6
90464–13004	D – 5
90464–13073	D – 6

CODIGO Nº	REF. Nº
90464–13249	F – 3
90464–14228	D – 7
90464–15157	E – 10
90464–15195	E – 10
90464–16005	C – 2
90464–16011	D – 9
90464–16012	D – 9
90464–16061	G – 6
90464–20014	F – 7
90464–28003	G – 4
90464–32060	G – 6
90464–47001	F – 15
90465–08395	C – 8
90465–10040	B – 12
90465–13M11	D – 7
90465–15011	G – 6
90467–08003	B – 9
90467–09006	E – 2
90467–10M04	B – 9
90467–11090	B – 7
90467–12085	F – 2
90467–120A3	E – 11
90467–14015	B – 14
90467–15001	B – 13
90467–180A0	C – 3
90467–180A3	B – 13
90467–18172	C – 3
90467–200A0	B – 7
	B – 9
90467–310A0	B – 9
90468–16001	E – 4
90480–01558	D – 8
	F – 9
90480–01605	F – 4
90480–08005	D – 6
90480–08006	G – 4
90480–08264	B – 13
	F – 15
90480–10003	D – 4
90480–10542	D – 15
90480–11005	B – 8
90480–11006	E – 13
90480–12023	E – 2
90480–12607	E – 14
90480–12613	F – 7
90480–14003	D – 5
	F – 7
90480–14005	C – 4

CODIGO Nº	REF. Nº
90480–15363	B – 8
90501–080A2	C – 14
90501–12743	E – 15
90501–220A2	C – 10
90506–18008	E – 13
90506–20193	F – 2
90508–16052	C – 11
90508–18134	E – 13
90508–32020	C – 15
91312–05010	E – 2
91312–06016	B – 13
	D – 15
	G – 4
91312–06020	B – 8
91312–06025	B – 11
	E – 10
91312–06030	E – 10
91312–06090	D – 15
91314–06030	C – 4
91314–06035	E – 15
91314–08030	D – 12
	D – 14
	E – 10
91314–08035	C – 4
91314–08040	D – 13
91317–04025	G – 6
91317–06035	B – 8
91380–06012	G – 7
91402–16012	F – 2
91402–25015	E – 14
91492–12010	B – 15
91702–06018	F – 2
91808–16023	B – 2
91808–17032	B – 11
92012–05025	G – 6
92012–06016	D – 9
92012–06020	B – 14
92014–08014	C – 8
92017–06016	E – 14
92017–06025	G – 6
92902–12600	D – 9
92907–06200	F – 2
92907–08600	C – 11
93101–10090	B – 7
93102–12106	C – 15
93102–15212	C – 11
93102–35017	C – 13
93106–28043	E – 5

CODIGO Nº	REF. Nº
93106–40013	E – 7
93109–17071	D – 9
93210–04092	C – 6
93210–06667	B – 11
93210–09165	B – 11
	C – 7
93210–14003	B – 11
93210–14579	C – 6
93210–15566	B – 12
93210–15620	F – 2
93210–16325	C – 6
93210–27194	C – 8
93210–32172	C – 8
93210–33133	B – 7
93210–41N50	D – 13
93210–46001	B – 7
93305–20509	C – 12
93306–00006	B – 7
93306–00106	C – 10
	C – 14
93306–07208	E – 5
93306–20464	C – 12
93306–20531	E – 7
93306–20562	C – 12
93310–340N8	C – 10
93315–21570	C – 11
93315–31758	D – 9
93315–31759	D – 9
93317–11096	C – 10
93317–11295	C – 15
93317–330A0	D – 9
93317–330A1	D – 9
93317–43580	E – 7
93399–99932	D – 12
93399–99957	D – 14
93420–61M07	E – 7
93440–25186	C – 12
93440–28184	C – 12
93440–52014	C – 13
93450–16159	B – 3
93501–04011	E – 15
93603–09106	B – 11
93603–17070	B – 11
93607–44002	B – 6
93608–17263	C – 8
93900–00030	E – 5
	E – 7
94112–17100	E – 5

INDICE NUMERICO

CODIGO Nº	REF. Nº
94118–17068	E – 7
94580–25074	B – 11
94582–21114	E – 8
94591–64118	B – 6
94682–21031	E – 8
94701–00402	B – 2
95022–06008	G – 6
95022–06016	G – 4
95022–06030	D – 15
95022–08012	B – 2
95024–06012	E – 15
95024–06025	B – 7
95024–10040	D – 3
95027–06020	G – 3
95027–06025	C – 4
95027–10020	B – 9
95304–06700	C – 15
95307–04700	B – 15
95307–08700	F – 2
95602–05200	G – 6
95602–10200	D – 10
	D – 11
	E – 13
95602–14200	D – 11
95604–06200	E – 15
95604–08200	E – 8
95607–05200	D – 7
95607–06200	G – 3
95612–08625	B – 2
95702–06500	D – 5
95802–06014	B – 10
95802–06020	D – 4
95807–06035	B – 8
95812–06012	G – 6
95812–06030	B – 11
	C – 6
95812–06045	C – 6
95812–06055	C – 6
95812–06065	C – 6
95812–06080	B – 11
95812–08065	C – 6
95822–06020	C – 15
	G – 6
95827–06012	B – 9
95827–06014	C – 4
97702–40010	F – 13
97702–40016	F – 4
	F – 15

CODIGO Nº	REF. Nº
97702–50014	D – 6
97702–50016	F – 9
97702–50020	F – 9
97702–50116	F – 5
97702–50120	G – 4
97706–04012	G – 2
97707–40012	F – 4
97707–50016	F – 4
	F – 8
	F – 15
98507–04010	G – 3
98507–05012	B – 15
98507–05022	G – 3
98507–05035	G – 3
98507–06012	B – 15
98707–03016	G – 3
98902–05008	E – 3
98902–05014	E – 2
	G – 2
98902–05020	B – 14
99001–07600	C – 11
99001–10600	C – 15
99009–10400	B – 7
	C – 11
99009–17400	C – 15
99530–08012	C – 8
99530–10014	C – 6
99530–10114	B – 2

CODIGO Nº	REF. Nº

CODIGO Nº	REF. Nº

CODIGO Nº	REF. Nº

CODIGO Nº	REF. Nº